PRODUCT SPEC SHEET

12 or 24v DC Power Supply Unit

12 or 24vdc power supply offering 8 or 4 amps power.
This product includes a versatile 8 way fuse board with independent switchable outputs which can be triggered via the relay using NC, NO + or - (5-24vdc)
Each time the relay is triggered the individual outputs are set to either hold or drop the power where required to each device.
The enclosure can house 2x 7.0AH batteries.

FEATURES

Mains Input: 100~240Vac - 50~60Hz
Output in 12v mode: 13.2~14.0vdc (13.8vdc nominal) 8A max
Output in 24v mode: 27.0~28.0vdc (27.6vdc nominal) 4A max
Battery Output on 12v mode: 10.5~12.4vdc
Battery Output on 24v mode: 21.0~24.7vdc
Tamper: Front and Rear
Panel Indicators: Mains and Fault
Number of Outputs: 8
Fuse board relay can be triggered by N/C, N/O, +ve or -ve
Additional outputs include mains and independent relays
Protection: Over-current, Over-load, Over-charge, Over-discharge
Main Fuse: F3A
Output Fuse: F8A @12v default needs to be changed to F4A @ 24v
Charge Current: 0.7A max
Charger Fuse: 0.5a PTC
Typical Battery Capacity: 2 x 12v / 7Ah max (batteries not included)

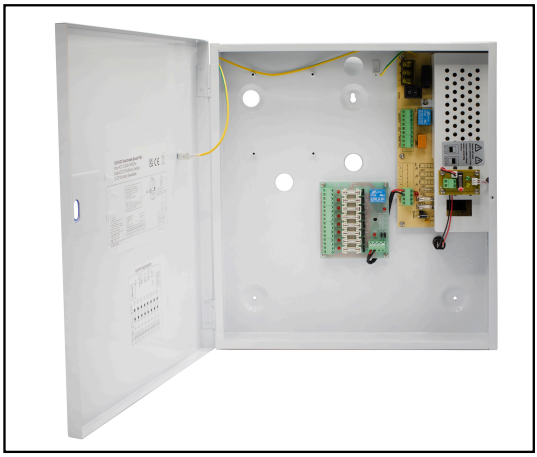

UT-PSU12-24V8-4A-8

Warranty: 3 Years

For more information contact your ADI salesperson or visit us at www.adiglobal.com

Rev: Feb 24

12/24v DC Power Supply Unit

PART SKU # UT-PSU12-24V8-4A-8

SKU PART #	UT-PSU12-24V8-4A-8
UPC	840049310896
HEIGHT	365mm
WIDTH	330mm
DEPTH	85mm
WEIGHT	3.7kg

Each PSU includes:
Fuses 1 x 8a, 1 x 4a, 1 x 3a, 1x 2a PG11 Gland x 1
M20 Rubber Grommets x 2
Plastic Sticky Grommets x 4
Battery Jumper Lead x 1

12/24VDC PSU with 8 Output Fire Relay Fuse Board

Input:AC110-240V 50/60Hz
Output:DC13.8V,8Amp (Default)
Or 27.6V,4Amp (Selectable)

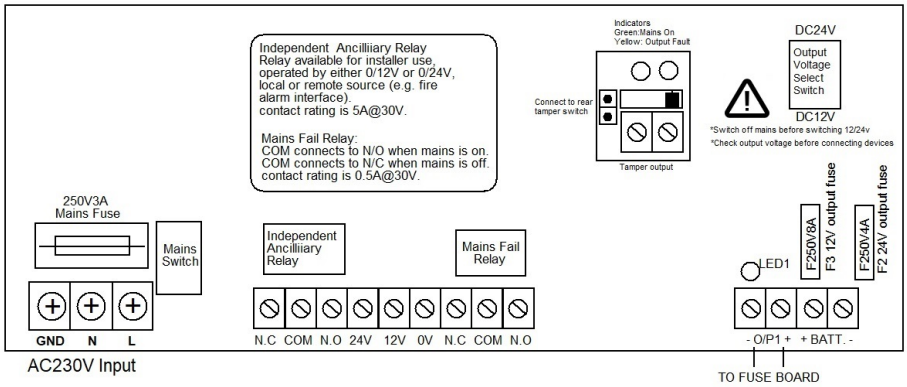

Fuse Board Connections

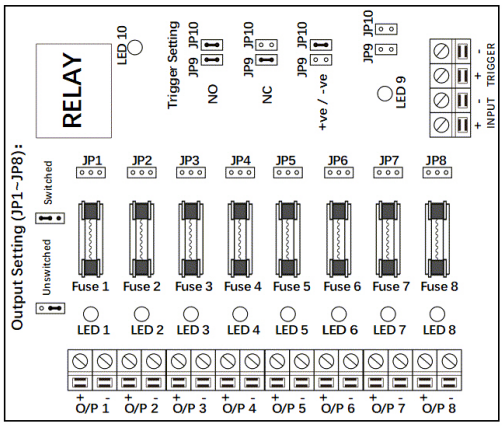

Terminals:

INPUT + : 12/24VDC from PSU O/P
INPUT - : 0V from PSU O/P
Trigger + : Trigger I/P from control device (+VE or Contact)
Trigger - : Trigger I/P from control device (0V or Contact)
O/P1~8 +: 12/24VDC output to load(un-switched or switched via relay)
O/P1~8 -: 0V output to load (Common 0V)
JP1~8: To set the O/P to switchable or un-switchable
JP9&JP10: To set the type of trigger signal, N.O or N.C or +ve or -ve

Fire Relay Trigger Configuration

Trigger Select	Jumpers	Trigger + & -	Indiactor LED10	O/P +
N.O	JP9:ON	Close	Off	No Output
	JP10:ON	Open	ON	+12/24V
N.C	JP9:ON	Close	ON	+12/24V
	JP10:OFF	Open	Off	No Output
+ve or -ve	JP9:OFF	Applied	ON	+12/24V
	JP10:ON	Removed	Off	No Output

Note1: Trigger terminals +&- are only polarity conscious when used in +ve or -ve mode.
Note 2: when trigger is -ve mode, its power source has to be a seperate PSU.

Rev: Feb 24