Hanwha Vision

Network Dome

QND-6022R1

2MP IR Dome Camera

Key Features

- Maximum 2megapixel (1920 x 1080) resolution
- 0.03Lux (Color), 0Lux (B/W, IR LED on)
- 4mm fixed lens
- Maximum 30fps@2MP all resolutions (H.265/H.264)
- H.265, H.264, MJPEG codec supported, Multiple streaming
- Motion detection, Tampering, Defocus detection
- Hallway view (90°/270°), LDC support
- Micro SD/SDHC/SDXC memory slot (Max. 128GB)
- IR viewable length 20m, PoE
- No-audio model

Compatible Accessories (Optional)

SBP-120WMW

SBP-300LMW

SPB-INW12

SBP-300WMW1

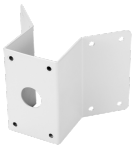

SBP-300KMW

SBP-300BW

SPG-IND12B

SBP-300PMW

SBP-300WMW

SBP-300NBW

SBP-300CMW

SBP-300HMW7

Design and specifications are subject to change without notice. The latest product information / specification can be found at HanwhaVision.com
Hanwha Vision is formerly known as Hanwha Techwin.

© Hanwha Vision CO., LTD. All rights reserved.

QND-6022R1

2MP IR Dome Camera

Specifications

Video	
Imaging Device	1/2.8" CMOS
Resolution	1920x1080, 1280x960, 1280x720, 800x600, 800x448, 720x576, 720x480, 640x480, 640x360
Max. Framerate	H.265/H.264: Max. 30fps/25fps(60Hz/50Hz) MJPEG: Max. 15fps (@2MP Max. 4fps)
Min. Illumination	Color: 0.03Lux(F1.6, 1/30sec) BW: 0Lux(IR LED on)
Video Out	CVBS: 1.0 Vp-p / 75Ω composite, 720x480(N), 720x576(P) for installation

Lens	
Focal Length (Zoom Ratio)	4.0mm fixed focal
Max. Aperture Ratio	F1.6
Angular Field of View	H: 88° / V: 47° / D: 105°
Min. Object Distance	0.5m (1.64ft)
Focus Control	Fixed

Pan / Tilt / Rotate	
Pan / Tilt / Rotate Range	0°~350° / 0°~67° / 0°~355°

Operational	
Camera Title	Displayed up to 85 characters
Day & Night	Auto(ICR)
Backlight Compensation	BLC, WDR, SSDR
Wide Dynamic Range	120dB
Digital Noise Reduction	SSNR
Motion Detection	4ea, polygonal zones
Privacy Masking	6ea, rectangular zones
Gain Control	Low / Middle / High
White Balance	ATW / AWC / Manual / Indoor / Outdoor
LDC	Support
Electronic Shutter Speed	Minimum / Maximum / Anti flicker (1/5~1/12,000sec)
Video Rotation	Flip, Mirror, Hallway view(90-/270-)
Analytics	Motion detection, Tampering, Defocus detection , Virtual area(Intrusion/Enter/Exit), Virtual line(Crossing/Direction)
Alarm I/O	Input 1ea / Output 1ea
Alarm Triggers	Analytics, Network disconnect, Alarm input
Alarm Events	File upload via FTP and e-mail Notification via e-mail SD/SDHC/SDXC or NAS recording at event triggers Alarm output Handover(PTZ preset)

Design and specifications are subject to change without notice. The latest product information / specification can be found at HanwhaVision.com
Hanwha Vision is formerly known as Hanwha Techwin.

© Hanwha Vision CO., LTD. All rights reserved.

Light Type	IR LED (850nm)
Light Viewable Length	20m(65.62ft)

Network	
Ethernet	RJ-45(10/100BASE-T)
Video Compression	H.265/H.264: Main/High, MJPEG
Smart Codec	WiseStream II
Bitrate Control	H.264/H.265: CBR or VBR MJPEG: VBR
Streaming	Unicast(6 users) / Multicast Multiple streaming(Up to 3 profiles)
Protocol	IPv4, IPv6, TCP/IP, UDP/IP, RTP(UDP), RTP(TCP), RTCP, RTSP, NTP, HTTP, HTTPS, SSL/TLS, DHCP, FTP, SMTP, ICMP, IGMP, SNMPv1/v2c/v3(MIB-2), ARP, DNS, DDNS, QoS, UPnP, Bonjour, LLDP
Application Programming Interface	ONVIF Profile S/G/T SUNAPI(HTTP API) Wisenet open platform

Security	
OS / Firmware Protect	Firmware encryption
User authentication	Digest Authentication, Prevent brute-force attack
Network authentication	802.1X Authentication(EAP-TLS, EAP-LEAP, EAP-PEAP MSCHAPv2)
Secure Communication	HTTPS, SRTP, WSS(Websocket secure)
Access Control	Access control based on IP address
Data Protect	Authentication information encryption, ZIP compression encryption
Audit	User Access/System/Event log management
Device ID	Device Certificate(Hanwha Private Root CA)
Secure Storage	SDcard partition encrypt

General	
Webpage Language	English, Korean, Chinese, French, Italian, Spanish, German, Japanese, Russian, Portuguese, Czech, Polish, Turkish, Dutch
Edge Storage	Micro SD/SDHC/SDXC 1slot 128GB
Memory	512MB RAM, 256MB Flash

Environmental & Electrical	
Operating Temperature / Humidity	-10°C~+55°C(+14°F ~ +131°F) / 0~90% RH
Storage Temperature / Humidity	-30°C~+60°C(-22°F ~ +140°F) / 0~90% RH
Input Voltage	PoE(IEEE802.3af, Class3), 12VDC
Power Consumption	PoE: Max 7.40W, typical 6.00W 12VDC: Max 6.40W, typical 5.10W

Mechanical	
Color / Material	White / Plastic
RAL Code	RAL9003
Product Dimensions / Weight	ø110.0x86.0mm(ø4.33x3.39"), 255g(0.56 lb)

DORI (EN62676-4 standard)	
Detect (25PPM/ 8PPF)	40.0m(131.36ft)
Observe (63PPM/ 19PPF)	16.0m(52.54ft)
Recognize (125PPM/ 38PPF)	8.0m(26.27ft)
Identify (250PPM/ 76PPF)	4.0m(13.14ft)

Design and specifications are subject to change without notice. The latest product information / specification can be found at HanwhaVision.com
Hanwha Vision is formerly known as Hanwha Techwin.

© Hanwha Vision CO., LTD. All rights reserved.

QND-6022R1

2MP IR Dome Camera

CAD

Unit:mm [inch]

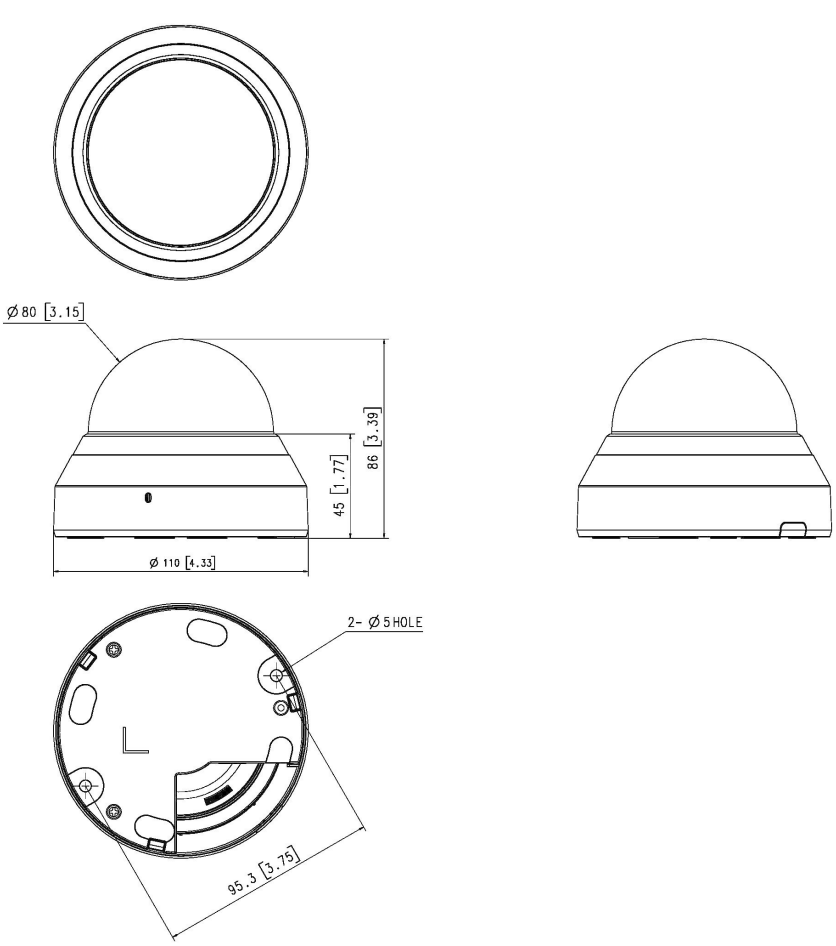

Design and specifications are subject to change without notice. The latest product information / specification can be found at HanwhaVision.com
Hanwha Vision is formerly known as Hanwha Techwin.

© Hanwha Vision CO., LTD. All rights reserved.