Hanwha Vision

Network PTZ

XNP-9250R

4K 25x IR PTZ Camera

Key Features

- Max. 4K resolution
- 5~125mm (25x) optical zoom (digital 32x, total 800x zoom)
- Max. IR viewable length 200m (Wise IR)
- Day & Night (ICR), extreme WDR (120dB), DIS (Built-in gyro sensor)
- Intelligent Analytics, Object auto tracking(Person/Vehicle), Target lock tracking
- H.264, H.265, MJPEG codec, WiseStreamII
- IP66, IK10, NEMA4X, NEMA-TS 2 (2.2.8, 2.2.9)
- PTZ PLUS Design applied (Compact, Lighter, Simple cabling)
- SFP-supported by injector

Compatible Accessories (Optional)

SBP-156CMW

SBP-156HMW

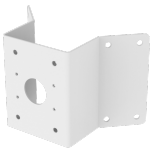

SBP-156KMW

SBP-156LMW

SBP-156WMW

SBP-300BW

SBP-300CMW

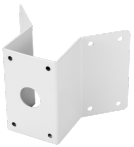

SBP-300KMW

SBP-300LMW

SBP-300PMW

SBP-300WMW

SBP-300WMW1

SPB-PTZ85W

SPM-4210

Design and specifications are subject to change without notice. The latest product information / specification can be found at HanwhaVision.com.
Hanwha Vision is formerly known as Hanwha Techwin.

© Hanwha Vision CO., LTD. All rights reserved.

XNP-9250R

4K 25x IR PTZ Camera

Specifications

Video	
Imaging Device	1/2.8" CMOS
Resolution	3840x2160, 2592x1944, 2592x1464, 1920x1080, 1600x1200, 1280x1024, 1280x960, 1280x720, 1024x768, 800x600, 800x448, 720x576, 720x480, 640x480, 640x360, 320x240
Max. Framerate	H.265/H.264: Max. 30fps/25fps(60Hz/50Hz) MJPEG: Max. 30fps/25fps(60Hz/50Hz) (@8MP Max. 5fps)
Min. Illumination	Color: 0.1Lux(F1.6, 1/30sec) BW: 0Lux(IR LED On)

Lens	
Focal Length (Zoom Ratio)	5~125mm(25x) zoom (digital 32x, total 800x zoom)
Optical Zoom	25x
Max. Aperture Ratio	F1.6(Wide)~F3.73(Tele)
Angular Field of View	H: 57.42°(Wide)~2.71°(Tele) / V: 33.54°(Wide)~1.55°(Tele)
Min. Object Distance	5m(16.4ft)
Focus Control	Oneshot AF, Focus save
Lens Type	DC auto iris

Pan / Tilt / Rotate	
Pan Range	360° Endless
Pan Speed	Max. 700°/sec, Manual: 0.024°/sec~250°/sec
Tilt Range	110°(90°~-20°)
Tilt Speed	Max. 500°/sec, Manual: 0.024°/sec~250°/sec
Sequence	Preset(300ea), Swing, Group(6ea), Trace, Tour, Auto Run, Schedule
Preset Accuracy	Up to ±0.1°, Pan/Tilt correction

Operational	
Camera Title	Displayed up to 85 characters
Direction Indicator	Support
Day & Night	Auto(ICR)
Backlight Compensation	BLC, HLC, WDR, SSDR
Wide Dynamic Range	Extreme WDR(120dB)
Digital Noise Reduction	SSNR V
Digital Image Stabilization	Support(built-in gyro sensor)
Defog	Support
Motion Detection	8ea, 8point polygonal zones
Privacy Masking	32ea, 4point Quadrangle zones - Color: Gray/Green/Red/Blue/Black/White - Mosaic
Gain Control	Low / Middle / High

Design and specifications are subject to change without notice. The latest product information / specification can be found at HanwhaVision.com.
Hanwha Vision is formerly known as Hanwha Techwin.

© Hanwha Vision CO., LTD. All rights reserved.

White Balance	ATW / AWC / Manual / Indoor / Outdoor
Electronic Shutter Speed	Minimum / Maximum / Anti flicker (2~1/12,000sec)
Video Rotation	Flip&Mirror
Analytics	Directional detection, Fog detection, Face detection, Motion detection, Appear/Disappear, Enter/Exit, Loitering, Tampering, Virtual line, Shock detection * Audio detection, Sound classification(with NW I/O Box)
Alarm Triggers	Analytics, Network disconnect * Alarm input(with NW I/O Box)
Alarm Events	When alarm trigger occurred - File upload(image) : e-mail/FTP/SFTP - FIle upload(video clip): FTP/SFTP - Notification : e-mail - Recording : SD/SDHC/SDXC or NAS recording at event triggers - Handover: PTZ preset, send message by HTTP/HTTPS/TCP - Audio clip playback - MQTT: publication * Alarm output (Via optional I/O box SPM-4210)
Light Type	IR LED(850nm)
IR Viewable Length	200m(656.17ft), Wise IR
Water Removal	Support(Spin dry, Lens heater)
Auto Tracking	Support Object auto tracking(Person/Vehicle) Target lock tracking

Network	
Ethernet	Metal shielded RJ-45(10/100BASE-T)
Video Compression	H.265/H.264: Main/Baseline/High, MJPEG
Smart Codec	Manual(5ea area), WiseStream II
Video Quality Adjustment	H.264/H.265: Target bitrate level control MJPEG: Target bitrate level control
Bitrate Control	H.264/H.265: CBR or VBR MJPEG: VBR
Streaming	Unicast(20 users) / Multicast (128 user) Multiple streaming(Up to 10 profiles)
Protocol	IPv4, IPv6, TCP/IP, UDP/IP, RTP(UDP), RTP(TCP), RTCP, RTSP, NTP, HTTP, HTTPS, SSL/TLS, DHCP, FTP/SFTP, SMTP, ICMP, IGMP, SNMPv1/v2c/v3(MIB-2), ARP, DNS, DDNS, QoS, UPnP, Bonjour, LLDP, CDP, SRTP(TCP, UDP Unicast), NTCIP1205, MQTT
Application Programming Interface	ONVIF Profile S/G/T SUNAPI(HTTP API) Hanwha Vision Open Platform

Security	
OS / Firmware Protect	Encrypted Firmware, Secure boot, Signed Firmware
User authentication	Digest Authentication, Prevent brute-force attacks
Network authentication	IEEE 802.1X(EAP-TLS, EAP-LEAP, EAP-PEAP, MSCHAPv2)
Secure Communication	HTTPS, WSS(WebSocket Secure), SRTP
Access Control	IP-based access control
Data Protect	Encryption Credentials, Encrypt compress for live recording file export
Audit	Access / System / Event Log management
Device ID	Device certificate(Hanwha Vision Root CA)
Secure Storage	HTPM(Hanwha trusted platform module), SDcard partition encrypt
Security Certificate	CyberSecurity assuarance program UL CAP(UL 2900-2-3 L2)

General	
Webpage Language	English, Korean, Chinese, French, Italian, Spanish, German, Japanese, Russian, Swedish, Portuguese, Czech, Polish, Turkish, Dutch, Hungarian, Greek

Design and specifications are subject to change without notice. The latest product information / specification can be found at HanwhaVision.com.
Hanwha Vision is formerly known as Hanwha Techwin.

© Hanwha Vision CO., LTD. All rights reserved.

Edge Storage	Micro SD/SDHC/SDXC 2slot 1TB
Memory	4GB RAM, 512MB Flash

Environmental & Electrical	
Operating Temperature / Humidity	-40°C~+55°C(-40°F ~ +131°F) / +74°C(+165°F) (MAX) based on NEMA-TS 2(2.2.7) * Start up should be done at above -30°C 0~100%RH(Condensing) Humidity control with AIR vent
Storage Temperature / Humidity	-50°C ~ +60°C (-58°F ~ +140°F) / Less than 90% RH
Certification	IP66, IK10, NEMA4X, NEMA-TS 2(2.2.8, 2.2.9)
Input Voltage	PoE++(IEEE802.3bt, Class6, Type3, Injector included)
Power Consumption	Typical 20W, Max 40W

Mechanical	
Color / Material	Body : White / Aluminum Head : Black / Polycarbontate Hard-coated dome
RAL Code	White: RAL9003 / Black: RAL9005
Product Dimensions / Weight	ø158x293.3mm(6.22x11.55") / 3200g(7.05lb)
Hanging Mount (Dome)	SBP-156HMW
Ceiling Mount (Assy)	SBP-156CMW, SBP-300CMTS, SBP-300CMW1/900CMW, SBP-150CMI/300CMI
Wall Mount	SBP-156WMW, SBP-300WMW, SBP-300WMW1, SBP-400WMW, SBP-250WMW
Pole Mount	SBP-300PMW2
In-ceiling Mount	SHP-1563FPW, SHP-1563FW
Parapet Mount	SBP-156LMW, SBP-156LMW1, SBP-300LMW
Corner Mount	SBP-156KMW, SBP-300KMW1
Cabinet	SBP-300NBW
Other Compatible Models	SPB-PTZ85W

DORI (EN62676-4 standard)	
Detect (25PPM/ 8PPF)	Wide: 140.2m(460.0ft) / Tele: 3246.9m(10652.4ft)
Observe (63PPM/ 19PPF)	Wide: 56.1m(184.0ft) / Tele: 1298.7m(4261.0ft)
Recognize (125PPM/ 38PPF)	Wide: 28.0m(92.0ft) / Tele: 649.4m(2130.5ft)
Identify (250PPM/ 76PPF)	Wide: 14.0m(46.0ft) / Tele: 324.7m(1065.2ft)

Design and specifications are subject to change without notice. The latest product information / specification can be found at HanwhaVision.com.
Hanwha Vision is formerly known as Hanwha Techwin.

© Hanwha Vision CO., LTD. All rights reserved.

XNP-9250R

4K 25x IR PTZ Camera

CAD

Unit:mm [inch]

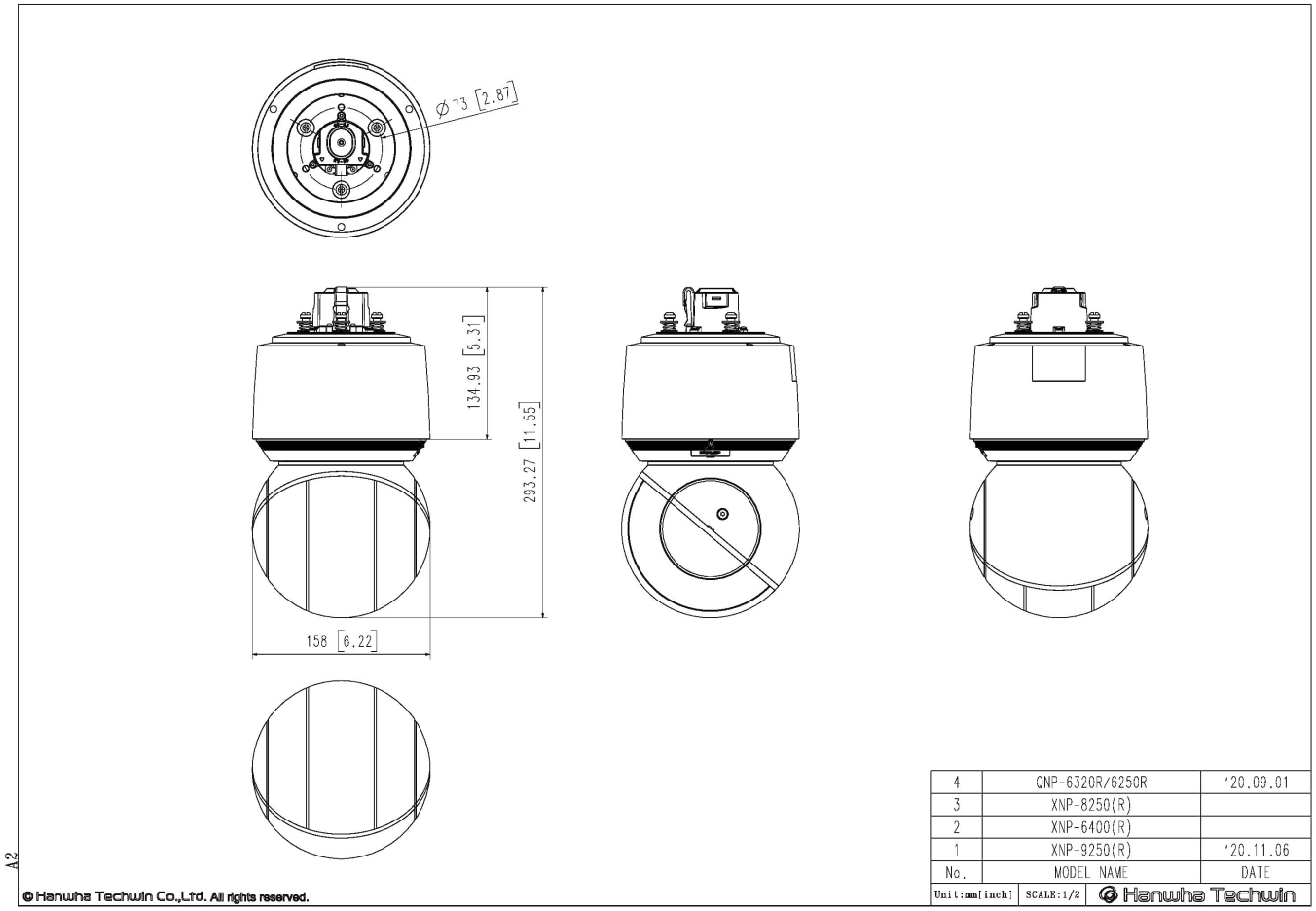

Design and specifications are subject to change without notice. The latest product information / specification can be found at HanwhaVision.com.
Hanwha Vision is formerly known as Hanwha Techwin.

© Hanwha Vision CO., LTD. All rights reserved.