Hanwha Vision

Network | Dome

XND-6080R

2M H.265 IR Dome Camera

Key Features

- 2.8 ~ 12mm (4.3x) motorized varifocal lens
- Max. 60fps@all resolutions (H.265/H.264)
- Day & Night (ICR), WDR(150dB)
- Loitering, Directional detection, Fog detection
- Digital auto tracking, Sound classification, Tampering
- Motion detection, Handover
- Dual SD slots (Max. 512GB)
- Hallway view, WiseStream II support
- IR viewable length 30m, IK08

Compatible Accessories (Optional)

SBP-300B

SBP-300CM

SBP-300HM8

SBP-300KM

SBP-300LM

SBP-300NB

SBP-300PM

SBP-300WM

SBP-300WM1

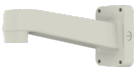

SBP-390WM2

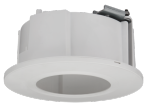

SHD-1408FW

Design and specifications are subject to change without notice. The latest product information / specification can be found at HanwhaVision.com.
Hanwha Vision is formerly known as Hanwha Techwin.

© Hanwha Vision CO., LTD. All rights reserved.

XND-6080R

2M H.265 IR Dome Camera

Specifications

Video	
Imaging Device	1/2.8" CMOS
Resolution	1920x1080, 1280x1024, 1280x960, 1280x720, 1024x768, 800x600, 800x448, 720x576, 720x480, 640x480, 640x360, 320x240
Max. Framerate	H.265/H.264: Max. 60fps/50fps(60Hz/50Hz) MJPEG: Max. 30fps/25fps(60Hz/50Hz)
Min. Illumination	Color: 0.015Lux(F1.4, 1/30sec, 30IRE) BW: 0.0015Lux(F1.4, 1/30sec, 30IRE), 0Lux(IR LED on)
Video Out	CVBS: 1.0 Vp-p / 75Ω composite, 720x480(N), 720x576(P) for installation USB: Micro USB Type B, 1280x720 for installation

Lens	
Focal Length (Zoom Ratio)	2.8~12mm(4.3x) motorized varifocal
Max. Aperture Ratio	F1.4(Wide)~F3.6(Tele)
Angular Field of View	H: 120°(Wide)~27°(Tele) V: 63°(Wide)~15°(Tele) D: 143°(Wide)~32°(Tele)
Min. Object Distance	0.5m(1.64ft)
Focus Control	Simple focus
Lens Type	DC auto iris, P iris

Pan / Tilt / Rotate	
Pan / Tilt / Rotate Range	0°~354° / 0°~67° / 0°~355°

Operational	
Camera Title	Displayed up to 85 characters
Day & Night	Auto(ICR)
Backlight Compensation	BLC, HLC, WDR, SSDR
Wide Dynamic Range	150dB
Digital Noise Reduction	SSNR V
Digital Image Stabilization	Support
Defog	Support
Motion Detection	8ea, 8point polygonal zones
Privacy Masking	32ea, polygonal zones - Color: Grey/Green/Red/Blue/Black/White - Mosaic
Gain Control	Low / Middle / High
White Balance	ATW / AWC / Manual / Indoor / Outdoor
LDC	Support
Electronic Shutter Speed	Minimum / Maximum / Anti flicker (2~1/12,000sec)
Video Rotation	Flip, Mirror, Hallway view(90°/270°)

Design and specifications are subject to change without notice. The latest product information / specification can be found at HanwhaVision.com.
Hanwha Vision is formerly known as Hanwha Techwin.

© Hanwha Vision CO., LTD. All rights reserved.

Analytics	Defocus detection, Directional detection, Fog detection, Face detection, Motion detection, Digital auto tracking, Appear/Disappear, Enter/Exit, Loitering, Tampering, Virtual line, Audio detection, Sound classification
Alarm I/O	Input 1ea / Output 1ea
Alarm Triggers	Analytics, Network disconnect, Alarm input
Alarm Events	File upload via FTP and E-Mail Notification via E-Mail SD/SDHC/SDXC or NAS recording at Event Triggers Alarm output Handover
Audio In	Selectable(Mic in/Line in, Built-in mic), Supply voltage: 2.5VDC(4mA), Input impedance: 2K Ohm
Audio Out	Line out, Max. output level: 1Vrms
Light Type	IR LED(850nm)
Light Viewable Length	30m(98.4ft)

Network	
Ethernet	RJ-45(10/100BASE-T)
Video Compression	H.265/H.264: Main/Baseline/High, MJPEG
Audio Compression	G.711 u-law /G.726 Selectable G.726(ADPCM) 8KHz, G.711 8KHz G.726 : 16Kbps, 24Kbps, 32Kbps, 40Kbps AAC-LC : 48Kbps at 16KHz
Smart Codec	Manual(5ea area), WiseStream II
Video Quality Adjustment	H.264/H.265: Target bitrate level control MJPEG: Target bitrate level control
Bitrate Control	H.264/H.265: CBR or VBR MJPEG: VBR
Streaming	Unicast(20 users) / Multicast Multiple streaming(Up to 10 profiles)
Protocol	IPv4, IPv6, TCP/IP, UDP/IP, RTP(UDP), RTP(TCP), RTCP, RTSP, NTP, HTTP, HTTPS, SSL/TLS, DHCP, FTP, SMTP, ICMP, IGMP, SNMPv1/v2c/v3(MIB-2), ARP, DNS, DDNS, QoS, UPnP, Bonjour , LLDP, SRTP
Security	HTTPS(SSL) Login Authentication Digest Login Authentication IP Address Filtering User access Log 802.1X Authentication(EAP-TLS, EAP-LEAP)
Application Programming Interface	ONVIF Profile S/G/T SUNAPI(HTTP API) Hanwha vision open platform

General	
Edge Storage	Micro SD/SDHC/SDXC 2slot 512GB
Memory	1024MB RAM, 256MB Flash

Environmental & Electrical	
Operating Temperature / Humidity	-10°C~+55°C / 0~90% RH(non-condensing)
Storage Temperature / Humidity	-50°C~+60°C / 0~90% RH
Certification	IK08
Input Voltage	PoE(IEEE802.3af, Class3), 12VDC
Power Consumption	PoE : Max 10W 12VDC : Max 9W

Mechanical	
Color / Material	Ivory / Plastic
Product Dimensions / Weight	ø140.8x113.0mm / 624g

Design and specifications are subject to change without notice. The latest product information / specification can be found at HanwhaVision.com.
Hanwha Vision is formerly known as Hanwha Techwin.

© Hanwha Vision CO., LTD. All rights reserved.

XND-6080R

2M H.265 IR Dome Camera

CAD

Unit:mm [inch]

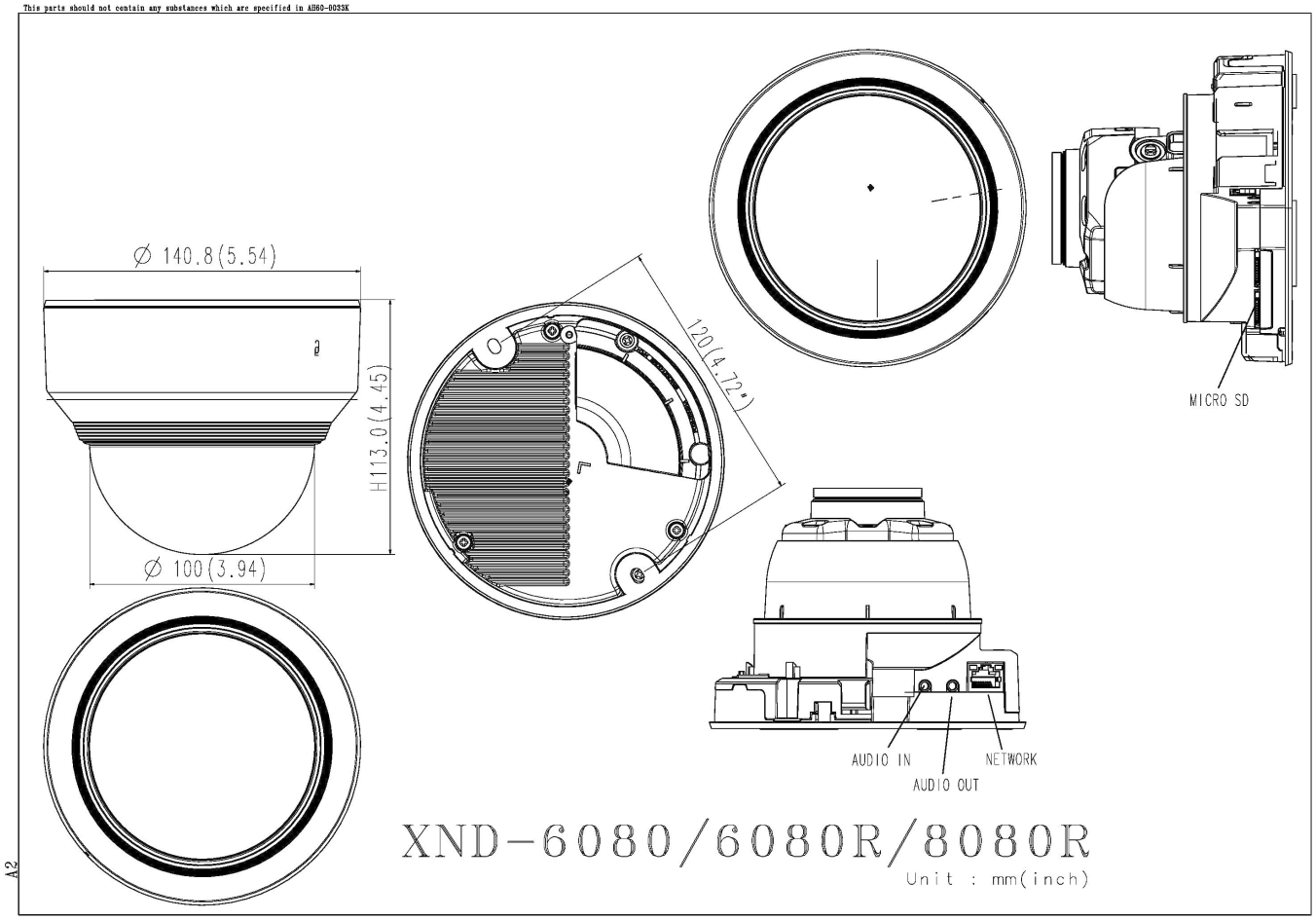

Design and specifications are subject to change without notice. The latest product information / specification can be found at HanwhaVision.com.
Hanwha Vision is formerly known as Hanwha Techwin.

© Hanwha Vision CO., LTD. All rights reserved.