Network | Multi-sensor

PNM-C32083RVQ

4K x 4ch AI Camera

Key Features

- 360° Analytics events based on AI engine: Classified object (Person/Face/Vehicle/License plate)
- 360° Attributes search (Vehicle type: Car/Bus/Truck/Motorcycle/Bicycle)
- AI based loitering detection and line crossing detection
- AI based WiseNR II , Auto prefer shutter control, WiseStreamIII
- Compact size & semi-modular design
- Next level cybersecurity (TPM 2.0 with FIPS 140-2 level2)
- Reinforced durability (IP66, IK10, NEMA4X)

Design and specifications are subject to change without notice. The latest product information / specification can be found at HanwhaVision.com
Hanwha Vision is formerly known as Hanwha Techwin.

© Hanwha Vision CO., LTD. All rights reserved.

PNM-C32083RVQ

4K x 4ch AI Camera

Specifications

Video	
Imaging Device	1/2.8" CMOS x 4CH
Resolution	3840x2160, 1920x1080, 1280x1024, 1280x960, 1280x720, 1024x768, 800x600, 800x448, 720x576, 720x480, 640x480, 640x360, 320x240
Max. Framerate	[AI On] H.265/H.264: Max. 15fps/15fps(60Hz/50Hz) MJPEG: Max. 15fps/15fps(@8MP Max. 5fps) [AI Off] H.265/H.264: Max. 20fps/20fps(60Hz/50Hz) MJPEG: Max. 20fps/20fps(@8MP Max. 5fps)
Min. Illumination	Color: 0.1Lux(F1.5, 1/30sec, 30IRE) BW: 0.01Lux(F1.5, 1/30sec, 30IRE), 0Lux(IR LED on)
Video Out	USB: Micro USB Type B, 1280x720 for installation

Lens	
Focal Length (Zoom Ratio)	3.3~5.7mm(1.7x) motorized varifocal
Max. Aperture Ratio	F1.5(Wide)~F1.9(Tele)
Angular Field of View	H: 109°(Wide)~56°(Tele) V: 55°(Wide)~31°(Tele) D: 136°(Wide)~65°(Tele)
Min. Object Distance	1.3m(4.27ft)
Focus Control	Simple focus
Lens Type	Fixed iris

Pan / Tilt / Rotate	
Pan / Tilt / Rotate Range	0°~360° / 0°~65° / 0°~90°

Operational	
Camera Title	Displayed up to 85 characters
Day & Night	Auto(ICR)
Backlight Compensation	BLC, WDR, SSDR
Wide Dynamic Range	120dB
Digital Noise Reduction	SSNR V , WiseNR II (Based on AI engine)
Motion Detection	8ea, 8point Polygonal zones
Privacy Masking	6ea, rectangular zones - Color: Grey/Black/White
Gain Control	Low / Middle / High
White Balance	ATW / AWC / Manual / Indoor / Outdoor
LDC	Support
Electronic Shutter Speed	Minimum / Maximum / Anti flicker(2~1/12,000sec) Prefer shutter control(Based on AI engine)
Video Rotation	Flip, Mirror, Hallway view(90°/270°) - Each channel separately

Design and specifications are subject to change without notice. The latest product information / specification can be found at HanwhaVision.com
Hanwha Vision is formerly known as Hanwha Techwin.

© Hanwha Vision CO., LTD. All rights reserved.

Analytics	Classified object type: Person/Face/Vehicle/License plate Attributes: Vehicle(Type: car/bus/truck/motorcycle/bicycle) Support BestShot Analytics events based on AI engine - Object detection, Virtual line(Crossing/Direction), Virtual area(Loitering/Intrusion/Enter/Exit) Analytics events - Defocus detection, Motion detection, Tampering, Audio detection, Sound classification, Virtual area(Appear/Disappear)
Alarm I/O	2 configurable I/O ports * Support extra alarm I/O via optional SPM-4210 I/O box
Alarm Triggers	Analytics, Network disconnect, Alarm input, App event, Time schedule, MQTT subscription
Alarm Events	When alarm trigger occurred - File upload(image): e-mail/FTP - Notification: e-mail - Recording: SD/SDHC/SDXC or NAS recording at event triggers - Alarm output - Handover: PTZ preset, send message by HTTP/HTTPS/TCP - Audio clip playback - MQTT: publication
Audio In	Selectable(mic in/line in)
Audio Out	Line out
IR Viewable Length	WiseIR 15m(49.21ft)

Network	
Ethernet	Metal shielded RJ-45(10/100/1000BASE-T)
Video Compression	H.265/H.264: Main/High, MJPEG
Audio Compression	G.711 u-law /G.726 Selectable G.726(ADPCM) 8KHz, G.711 8KHz G.726: 16Kbps, 24Kbps, 32Kbps, 40Kbps AAC-LC: 48Kbps at 16KHz
Smart Codec	Manual(5ea area), WiseStream II , WiseStream III (Based on AI engine)
Video Quality Adjustment	H.264/H.265: Target bitrate level control MJPEG: Target bitrate level control
Bitrate Control	H.264/H.265: CBR or VBR MJPEG: VBR
Streaming	Unicast(10 users) / Multicast Multiple streaming(Up to 3 profiles per channel)
Protocol	IPv4, IPv6, TCP/IP, UDP/IP, RTP(UDP), RTP(TCP), RTCP,RTSP, NTP, HTTP, HTTPS, SSL/TLS, DHCP, FTP, SMTP, ICMP, IGMP, SNMPv1/v2c/v3(MIB-2), ARP, DNS, DDNS, QoS, UPnP, Bonjour, LLDP, SRTP (TCP, UDP Unicast), MQTT
Application Programming Interface	ONVIF Profile S/T/M SUNAPI(HTTP API) Wisenet open platform

Security	
OS / Firmware Protect	Secure boot, Signed firmware, Firmware encryption
User authentication	Digest Authentication
Network authentication	802.1X Authentication(EAP-TLS, EAP-LEAP, EAP-PEAP MSCHAPv2)
Secure Communication	HTTPS, SRTP
Access Control	IP address filtering
Data Protect	Authentication information encryption, ZIP compression encryption
Audit	User Access/System/Event log
Device ID	Device Certificate(Hanwha Private Root CA)
Secure Storage	TPM(Trusted platform module)
Security Certificate	TPM with FIPS 140-2 level 2

General

Design and specifications are subject to change without notice. The latest product information / specification can be found at HanwhaVision.com
Hanwha Vision is formerly known as Hanwha Techwin.

© Hanwha Vision CO., LTD. All rights reserved.

Webpage Language	English, Korean, Chinese, French, Italian, Spanish, German, Japanese, Russian, Portuguese, Czech, Polish, Turkish, Dutch, Hungarian, Greek
Edge Storage	Micro SD/SDHC/SDXC 2slot Max. 1TB(512GBx2)
Memory	8GB RAM, 1GB Flash

Environmental & Electrical	
Operating Temperature / Humidity	-40°C~+55°C(-40°F~+131°F) * Start up should be done at above -35°C 0~95% RH(non-condensing) Humidity control /w Air vent
Storage Temperature / Humidity	-50°C~+60°C(-58°F~+140°F) / 0~95% RH
Certification	IP66, NEMA4X, IK10
Input Voltage	PoE+(IEEE802.3at Type2, Class4)
Power Consumption	PoE+: Max 25.5W, typical 22.0W

Mechanical	
Color / Material	Body: White / Aluminum Bubble: Hard-coated dome
RAL Code	RAL9003
Product Dimensions / Weight	ø250x114.2mm(ø9.84x4.50"), 2820g(6.22 lb)
Compatible Conduit hole / Gangbox	Conduit hole: 19.1mm(3/4")(M25) Gangbox: Single, Double, 4" Octagon, Square
Hanging Mount (Dome)	SBP-250HMW, SBP-276HMW

Certifications & Standards	
EMC	FCC 47 CFR 15 Subpart B Class A ICES-3(A)/NMB-3(A) CE/UKCA - EN 55032 Class A, EN 50130-4, EN 61000-3-2, EN 61000-3-3 VCCI CISPR 32 Class A RCM AS/NZS CISPR 32 Class A KS C 9832 Class A , KS C 9835
Safety	UL 62368-1, CAN/CSA C22.2 NO. 62368-1 IEC/EN 62471
Environment	IEC/EN 63000 IEC/EN 60529 IP66, IEC/EN 62262 IK10 NEMA 250 type 4X

DORI (EN62676-4 standard)	
Detect (25PPM/ 8PPF)	Wide: 54.8m(179.73ft) / Tele: 144.4m(473.88ft)
Observe (63PPM/ 19PPF)	Wide: 21.9m(71.89ft) / Tele: 57.8m(189.55ft)
Recognize (125PPM/ 38PPF)	Wide: 11.0m(35.95ft) / Tele: 28.9m(94.78ft)
Identify (250PPM/ 76PPF)	Wide: 5.5m(17.97ft) / Tele: 14.4m(47.39ft)

Design and specifications are subject to change without notice. The latest product information / specification can be found at HanwhaVision.com
Hanwha Vision is formerly known as Hanwha Techwin.

© Hanwha Vision CO., LTD. All rights reserved.

PNM-C32083RVQ

4K x 4ch AI Camera

CAD

Unit:mm [inch]

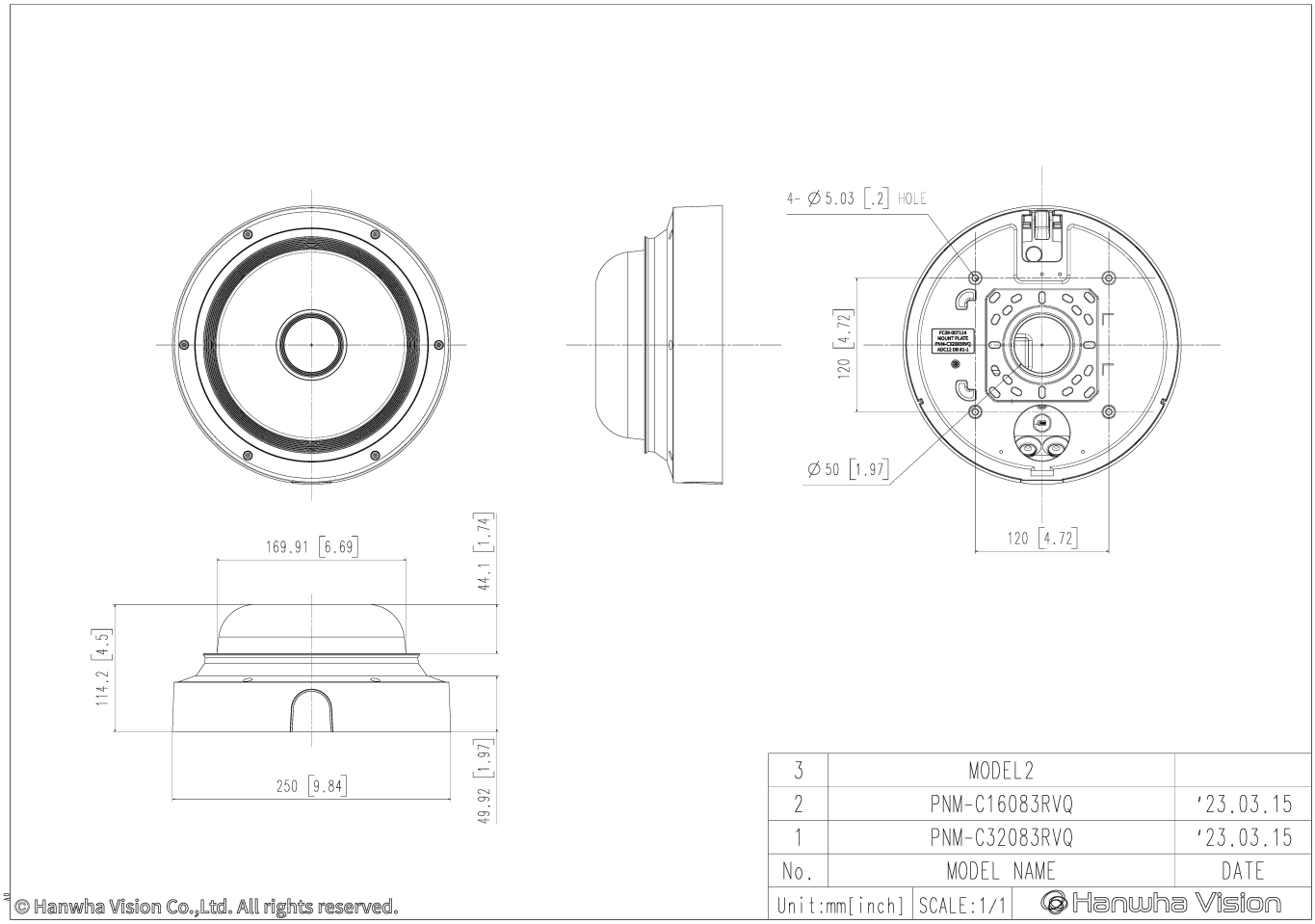

Design and specifications are subject to change without notice. The latest product information / specification can be found at HanwhaVision.com
Hanwha Vision is formerly known as Hanwha Techwin.

© Hanwha Vision CO., LTD. All rights reserved.