MC 346

Magnetic Contact, Recessed mounting, NC/NO

Technical data

Installation method	Recessed mounting
Contact function	Change-over (NC/NO)
Approvals	EN 50131-2-6 Grade 2, Class IIIA, INCERT B-582-1002, SBSC 9-203, Class 2, NBU T02-3/2019, FG; NF&A2P, CNPP 2124030002B0, GRADE 2 + RTC
Contact rating	48 VDC / 250 mA / 5 VA
Drill diameter mm	8
Magnet type	Alnico 5
Mounting on steel	Not recommended
Make distance (wood) mm	13
Make distance (steel) mm	X
Tamper protection	Yes
Connection	Cable
Housing material	ABS Plastic
Operating temperature range	-40°C – +70°C
Housing protection class	IP 67
Contact dimensions (L x Ø) mm	36 x 9
Magnet dimensions (L x Ø) mm	26 x 9
Grade	2

MC 346 is a universal magnetic contact with change-over (NC/NO) function that can be used in both alarm and access control systems for monitoring e.g. doors and windows against unauthorized opening. Both the contact and the magnet part are in a water proof (IP 67) plastic housing, which enables easy installation into wood without additional accessories. With our extensive range of installation accessories it is easy to install the contact either recessed or as a surface mount.

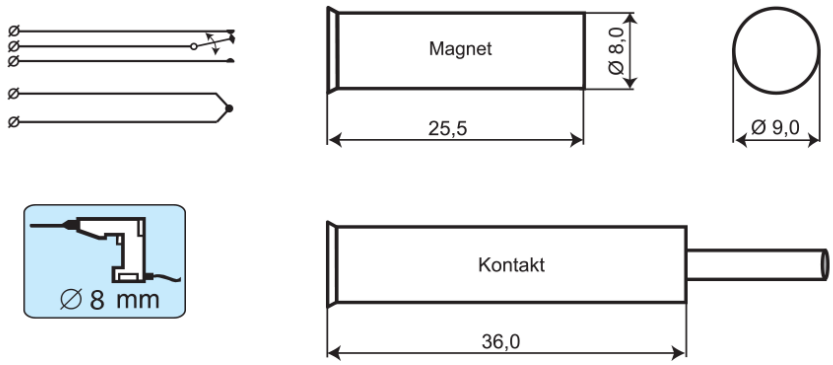

ORDERING INFORMATION

Model	Description
MC 346	Recessed magnetic contact, change-over, 2 m cable
MC 346-5	Recessed magnetic contact, change-over, 5 m cable
MC 346-10	Recessed magnetic contact, change-over, 10 m cable
MC 346-C	Recessed contact part without magnet, change-over, 5 m cable

Related products and accessories

MC 300-S1

Plastic flanges
for MC 340, 346, 347, 370

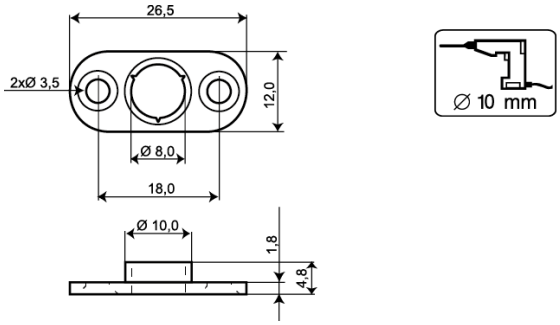

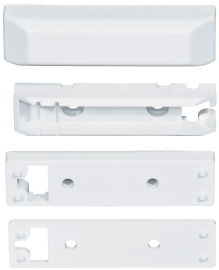

MC 300-S3

Plastic Housing
for MC 340, 346, 347

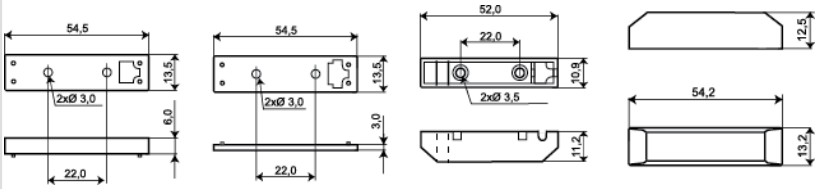

MC 300-S11

Plastic Flange
for MC 340, 346, 347 and 370

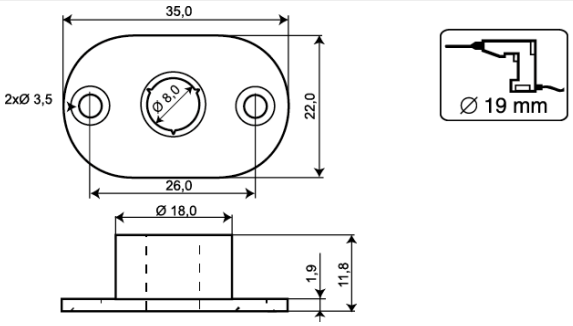

MC 300-S21

Plastic Snap-in Flange
for MC 340, 346, 347, 370

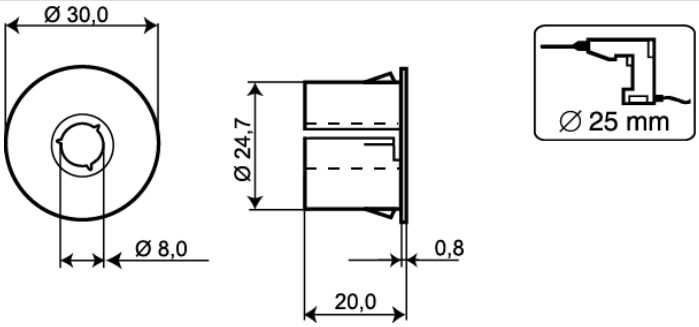

MC 300-S22

Snap-in Flange with Strong Magnet
for MC 340, 346, 347

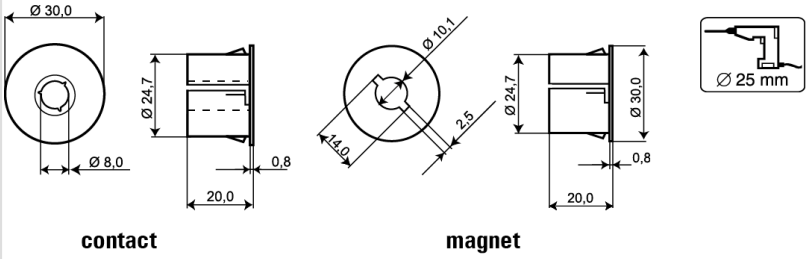

Related products and accessories

MC 300-S31

Plastic Snap-in Flange
for MC 340, 346, 347, 370

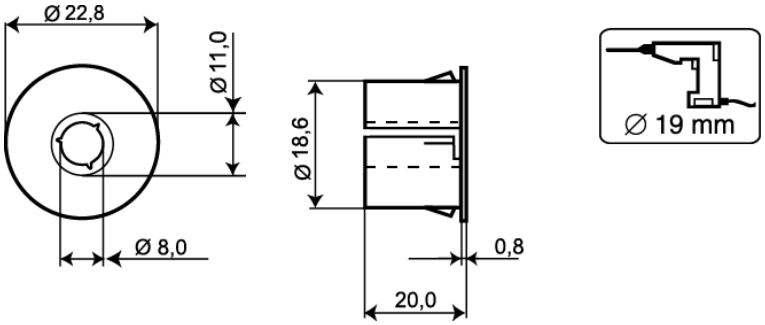

MC 300-S32

Snap-in Flange with Strong Magnet
for MC 340, 346, 347

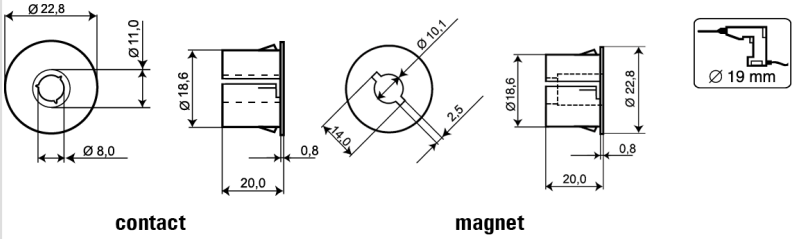

MC 300-S35
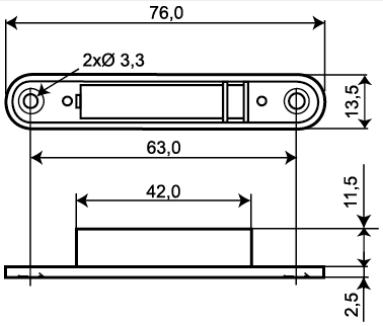
Plastic Housing
for MC 340, 346, 347