DL S8

Coiled Cord Door Loop

Technical data

Connection	RJ 45
Colour	White

Der DL S8 coiled cord door loop with 8 leads and RJ-45 connector in both ends. The door loop is designed for sliding doors, gates, overhead doors where an extendable cable is needed. DL S8 are a made of PUR material (cable track cables are particularly for continuously flexible use), this makes the door loop more elastic and resistant against sunlight, chemicals, etc. The door loop is available in two sizes, 100 cm and 250 cm (extended length). DL S8 can be used together with JB RJ45.

Related products and accessories

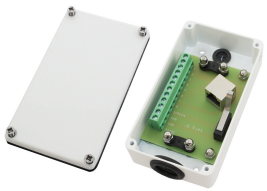	**JB RJ45** Junction Box in Metal	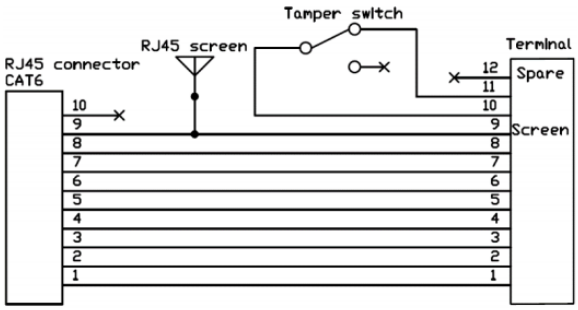
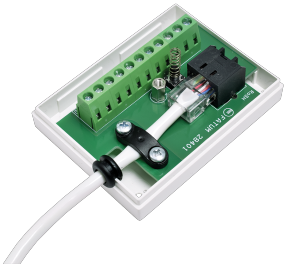	**28401** JUNCTION BOX “MINI”, RJ 45	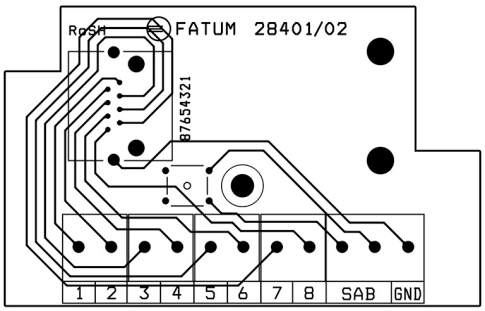
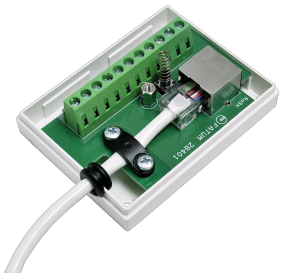	**28402** JUNCTION BOX “MINI”, SHIELDED RJ 45	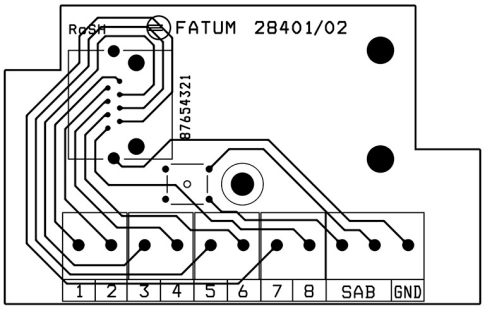
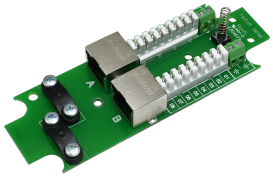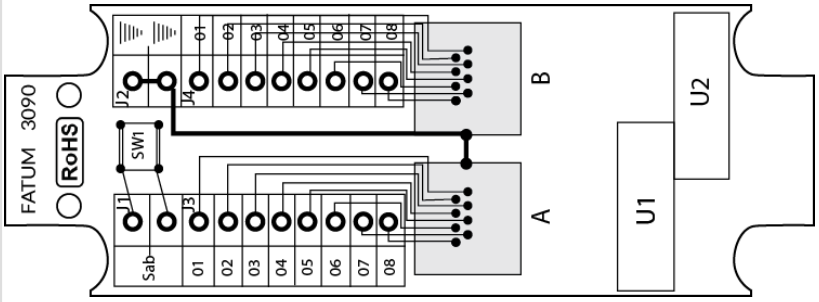	**3090** ALARM MODULE 16 POLES WITH 2x RJ 45, SHIELDED