INTRODUCTION

By selecting this device, you have acquired advanced active access-prevention technology. With ***BANDIT*** we offer you an affordable system which guarantees operational reliability, top performance and a discrete design.

More and more private and public buildings are being equipped with a protection system against burglary. When armed, these systems detect a burglary attempt. The detection is generally communicated by means of a siren and/or strobe or sometimes an automatic phone call to an alarm control centre or police station. In real terms these notifications are satisfying, but the subsequent human intervention often arrives more than 10 minutes after the event! Burglars are aware of this and use this time to steal the most valuable things and get away in time.

BANDIT offers a unique and active solution to this problem. For this system is totally capable of filling a large office, store or other room, within a few seconds, with a non transparent fog. This fog prevents persons from entering the room for at least 10 minutes after setting off the alarm, since they cannot see a thing. The ejected fog has a soft mint smell (to avoid possible fire interpretation by outsiders), it is colourless and leaves no traces. So the fog safely and quickly disables the vision capabilities of unwanted visitors.

BANDIT is installed in those rooms that contain the most valuable objects; by doing so, burglary damage is effectively limited to a strict minimum.

Advantages:

- Fills 28 m³ of space per second of fog expulsion.
- Extremely compact and discrete design.
- A system free of maintenance with very high operational reliability (by lack of moving components).
- The standard integrated “Power saver” and good thermal isolation, maintains a very low energy consumption, between 30 and 40 W/h, depending on the adjusted fog expulsion period.
- Continuous control of liquid level. When the level is too low to guarantee a full expulsion period it will be shown by an LED and an electrical contact will occur. In this case you’ll have to replace the internal *HY-3* pack. The recognition and acceptance of the new *HY-3 pack* (such as the resetting of the *HY-3* shortage notification), occur automatically. For recharging, the empty *HY-3 pack* has to be returned to your ***BANDIT***-dealer.
- In case of interrupted power supply voltage (230 VAC), operation is guaranteed: electronics ~24 hours, fog generator ~2 hours.
- The PCB is equipped with 3 dipswitch blocks (with a total of 10 dips). It gives you the possibility to easily program all elementary adjustments in a rather simple way without the need of other adjustment devices, such as PC/laptop and/or adjustment links.
- The device is prepared through plug-in connectors, to be extended with a control box and/or a wireless remote control.
- If mentioned while ordered, the device can be equipped with additional options, such as: straight ejection mouth, elongated ejection mouth, etc.

- The outer case is painted in a scratch resistant dark granite-like paint. As an additional option while ordering, you can choose between: metal-like cobalt blue, bronze-like holographic (cameleon) or broken white.
- The internal failure check system constantly controls the perfect operation of:
    - the internal power fuses and heat fuses
    - the power voltage of the 13,2 volt battery
    - the communication with the *HY-3* pack
    - the revs of the internal fan
    - the temperature of the heat exchanger and the *HY-3* pack.
    - the presence of power supply voltage.
    - the internal tamper circuit (anti-sabotage circuit).

Standards:

- Complies with European CE and EMC Standards.
- Complies with International Standard: IEC 839-1-3
- Approved by the Belgian Ministry of Internal Affairs
- Complies with the British Standard: BS 7939 : 1999
- Complies with the Dutch Standard of the NCP: IOE 03301-M
- Complies with the French Standard of the CNPP: AI 040006

Industrial property:

- ***BANDIT*** is a registered trade mark.
- ***HY-3*** is a registered trade mark.
- The ***BANDIT*** fog generator process is internationally protected by several patents.

Producer:

BANDIT nv./sa.
Nijverheidslaan 1547
B-3660 Opglabbeek
Belgium

H. R. Tongeren: 78.324
☎ : (32) 89 85 85 65
Fax : (32) 89 85 23 64
web : www.bandit.be

© Text and drawings in this document are subjected to author protection.
Copyright: *BANDIT* NV, B-3660 Opglabbeek, Belgium.

SAFETY PRECAUTIONS

Location:

- To prevent fire or shock hazard, do not expose this appliance to rain or moisture.
- Install the device in such a way to allow a good airflow.
- Only install the appliance as described, i.e. In vertical position, with the text on the front panel being readable from the floor. The maximum angle of inclination is 15° to the front and 10° in all other directions.
- System malfunction is possible at ambient temperatures above 50°C. Keep the appliance away from heat sources such as radiators, heating elements, stoves or other heat producing devices.
- The appliance is unexpectedly heavy, ~28 kg. It needs to be fixed on a sufficiently solid surface. Use sufficiently strong fixing materials, preferably our 240 floor or wall mounting, which are very solid and reliable supports for your unit.

Electrical connection:

- This appliance only operates on 230 VAC / 50 - 60Hz (210-240 VAC) supply voltage with grounding. Always check the voltage on the rear cover of the device.
- This device has a max. Peak consumption of 3.5 A / 230 VAC. Use only power cable and grounding of minimum1.5 mm² (preferably flexible with end splices). Use the strain relief which is ~1 cm beneath the entrance of the power supply input.
- If you detect a strange smell or smoke, the appliance must be switched off immediately by turning the main supply fuse to “off”.
- In case of doubt, immediately contact your ***BANDIT*** dealer or manufacturer, mentioned on the back cover of this manual.
- There are no repairable components inside the appliance. Leave all repairs to authorised persons and/or the manufacturer.
- The PCB contains a cooling plate. On all parts and areas beneath and around this cooling plate, there are uninsulated “dangerous voltage” points. This “dangerous voltage” can cause electrical shocks.
- For further connection instructions, see page 8.

Cleaning:

- Do not use volatile fluids, such as alcohol, thinner, petrol or spirit to clean the outside of the appliance. Use a clean, damp cloth.
- The black front textile has to be cleaned with a vacuum cleaner with soft brush mouth (dust signs). The frequency of cleaning depends on the quantity of dust present in the room to be secured.

Fog ejection control:

- The ejection nozzle is normally about 5°C warmer than the temperature of the environment, so not warm enough to get burned by. However during fog ejection and the first two minutes after, this nozzle can reach a temperature up to 120° C . Avoid direct contact with the nozzle after a fog ejection to prevent skin burns.
- A fog ejection test only should be performed when:
  a) All persons in the surrounding area and fire safety personnel have been notified.
  b) There is nobody in the immediate surroundings and/or direction of ejection.
- During a fog ejection test, it is prohibited to look towards the direction of the ejection nozzle from a distance less than 8 metres.

SPECIFICATIONS

Descriptions:

- Dimensions: 270 mm wide x 365 mm high x 255 mm deep.
- Weight: 28 kg.
- Max. Mains supply failure: Fog generator +2 hours and electronics +24 hours.
- Reaction time: 1 second between alarm signal and fog ejection.
- Fog ejection image:
  - 60° (standard) , or
  - Straight ahead (/R0 version)

Fog generator:

- Fog ejection capacity: 28 m³ filling of space / second with 25 cm eye↔ object.
- Fog ejection pressure: 16 BAR (1.6 Mpa).
- Maximum fog ejection period: 18 seconds.
- Warm-up time: 50 minutes from cold condition.
- Max./min. Environmental temp.: maximum 50°C and minimum 0°C.
- Maximum heat loss: 40 W/hour.
- Heat exchange capacity: 18 kW/hour.
- Nominal ejected droplet size: section 0,0004 mm (full aerosol).

HY-3 pack:

- HY-3 fluid contents: 1.4 litre.
- Nominal working pressure: 16 BAR (1.6 Mpa).
- Maximum allowed internal pressure: 60 BAR (6 Mpa).
- Construction material: rvs 304L and aluminium AlMgS1.
- Built-in electronics:
  - digital temperature sensor and analogue/digital E²prom memory level.
  - Tamper switch and control LED.
  - integrated propellant-expulsion security
  - direct working 12 V NC valve.

Electrical:

- Min./max mains power supply: 208 to 240 VAC at 50 to 60 Hz.
- Nominal 12 V low voltage: 13.1 V DC from 0 tot max. 1 A of load.
- Max peak current at 230 VAC: 3.5 A.
- Average power consumption: 40 W/hour.
- Capacity heating element: 750 W.
- Inputs: all inputs are insulated by an opto-coupler.
- Outputs: technical- and tamper outputs are potential free contacts, guard- and alarm outputs are npn-outputs.
- Current back-up: 12 V / 2 Ah (sealed lead acid battery).
- Power control: Pulse width modulator (PWM) through zero cross triac.
- Electronics:
  - Flasch micro-controller, Platina Pt1000 sensor converter,
  - On board communication with HY-3 pack
  - On board communication: 6-way connector for connection to "Control Box" and 5-way plug for wireless remote control.

The unit is packed in a cardboard box:
39 x 39 x 40 cm which contains:
- ***BANDIT*** 240 DB device.
- double sided warning sticker “Burglary...”
- this installation manual.
- "HY-3 grip" tool

MOUNTING

As a professional, you’ll have to consider properly, what would be the most effective place to install the appliance. Here are some guidelines which can help you with your decision:

☑ Logically, you’ll place the appliance so that the fog expulsion points in the direction of the supposed burglary entrance or in the area which contains the most valuable objects. Should this entrance provide a potential air passage to outside (i.e. a garage door, a glass frontage which is sensitive for break-in, etc.), You’ll have to prevent the ejection nozzle being pointed in this direction to avoid the potential fog ejection to be blown outside. In this case, you’ll have to point the nozzle towards a side wall to break the ejection pressure. This way, the fog will “cloud out” and only a smale amount of fog will be blown directly to the outside.

☑ Avoid the ejected fog forming a oneway trap. The ejected fog is supposed to form a strong take-away reducing barrier. Burglars are not supposed to be caught. Further, if there is a false alarm, the chances of trapping innocent persons is greater than catching burglars in a real burglary!

☑ Determine the place in such a way that the ejection nozzle does not point in the direction of fragile objects. The powerful fog expulsion could blow down these objects.

☑ There has to be a free passage area for the ejected fog, of at least 5 to 6 metres before it bounces against a fog blocking obstacle, i.e. a frontwall. The space of about 6 metres in front of the ejection nozzle will be the first to be filled out with fog, and this within 2 seconds.

☑ If there are already PIR-sensors installed in the room to be guarded and you don’t want to take any risks with false triggering because of fog expulsion, you’ll have to replace these PIR’s with combi-sensors (PIR/radar). If you have to install a new installation, use combi-sensors for volumetric detection in areas where ***BANDIT*** is installed. Radar never detects floating clouds, but most PIR’s do sporadically...

☑ Make sure that no burglar can come near the unit without being detected first by a sensor. This sensor has to start a fog expulsion, independently of an eventual entrance delay.

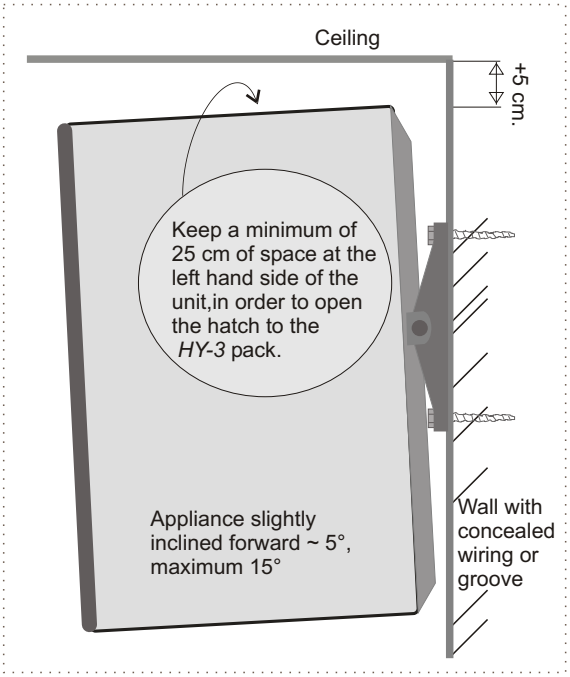

☑ Make sure the ***BANDIT*** is firmly secured to wall or floor, to prevent a burglar with prior knowledge from throwing the unit quickly through a window.
Use an optional available ***BANDIT*** wallmounting to install the unit against a wall:
There are two kinds of wallmounting: flat or swivel. Use the re-usable mounting help "Handy boy" to install the unit, as this tool carries the unit and makes it possible that any person can install the device easily by himself.

- For wallmounting against a solid brick wall, use plugs and screws supplied within
- For wallmounting against a double plaster wall, use special metal plaster-plugs available in any hardware store.
- For wallmounting against a single layer plaster wall: install the unit only in an inner corner and order in addition an optional plaster inner corner support plate. Don't install the unit with a normal wallmounting against these kind of walls to avoid the device Falling on the floor after a while, due to its weight.

☑ For floor mounting, use ***BANDIT*** floor mounting. This floor mounting is screwed into the floor or stuck to it with included double-sided adhesive tape. The device is installed at 6 cm off the floor to avoid possible damage due to cleaning tools or water.

Hidden mounting of the appliance

☑ For installation into a closet, order the device with option /L. This unit is supplied with 4 rubber supports, a 50 mm extended ejection nozzle (a standard closet door has a thickness of approximately 20 mm) and a heat resistant black metal door rosette (ejection nozzle passage). This way you can hide the device and at the outside only a little rosette (dia. ~50) will be visible. Make sure you provide a ventilation grid above and beneath to avoid too much rising of the temperature in the closet due to ***BANDIT*** 's heat loss. With an ambient temperature above 50°C, the unit will activate its technical output [Okout] and you can expect damage on the internal lead battery. Also available option besides the regular /L/R60 is the straith ejection mouth option /L /R0.

☞ Do not use any other rosette than the one supplied with the unit. The supplied rosette is made of aluminium with a special heat and steam resistant coating.

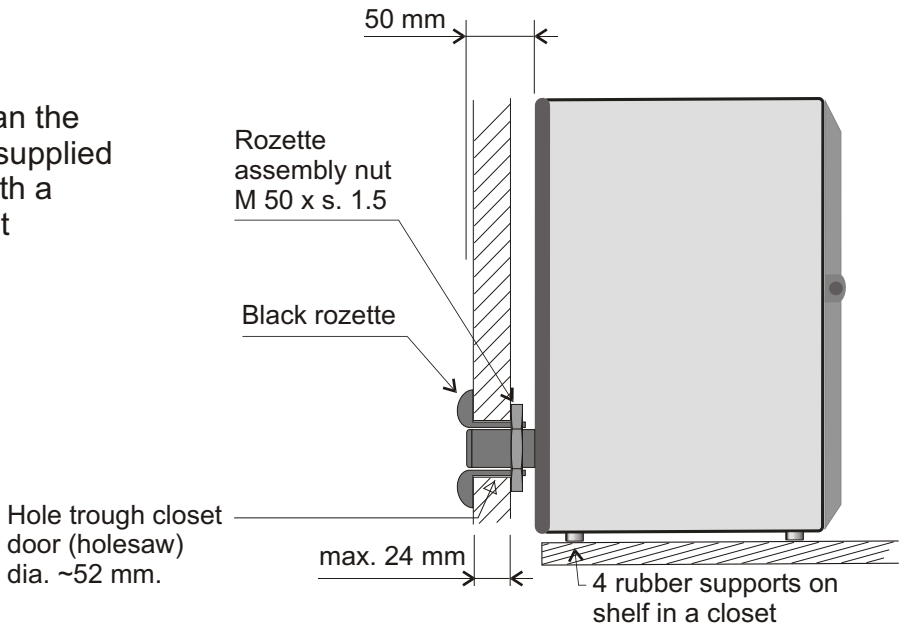

Mounting aid: handy boy.
This optional tool is used to install the device against a wall. It is attached with two pins to the wall mounting and so it makes a solid shelf.
On this temporary shelf, ***BANDIT*** is wired and adjusted. After installation, the two pins are pulled out, releasing the handy boy, so it can be used again in the next installation. You'll save yourself a lot of trouble to keep the device at a working height while connection works are being performed.

Mounting more than one *BANDIT* 240 devices in one large room.

Example of mounting in a shop of 630 m². Fog image after 8 sec. of fog expulsion.

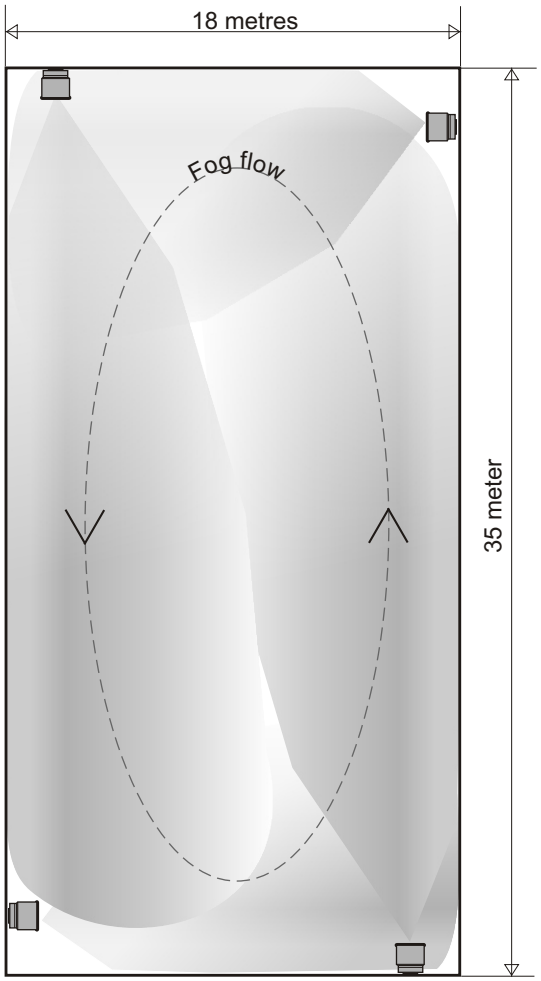

Example of mounting in a shop of 180 m². Fog image after 8 sec. of fog expulsion.

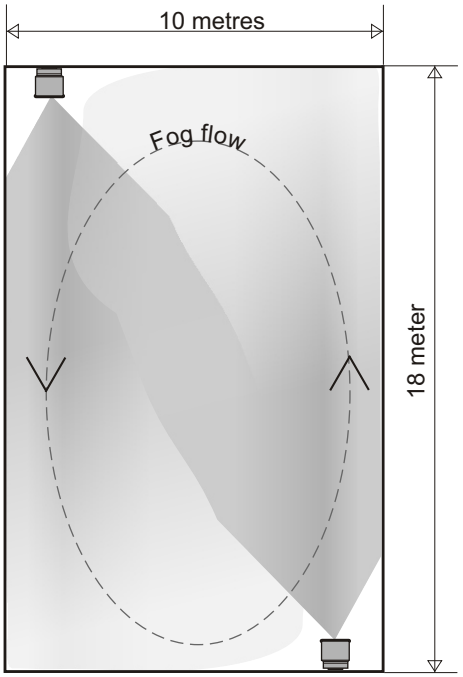

The ***BANDIT*** 240 has a room filling capacity of ~28 m³ per second. This corresponds with ~10 m²/sec. The max. surface area which can be secured with one device is equal to the max. fog expulsion period = 18 s x 10m²/s which is 180 m². For larger surfaces, such as: large shops and office spaces, one has to install more devices, one device each 170 m²
With normal ceiling height of 2.8 metres. Install the units in such a way that the fog stream of one device points next to, but not in the direction of the next unit. This way, there is a round stream of fog throughout the entire place. This guarantees the fastest filling of the room.

While mounting, keep in mind to provide a free passage for the fog stream. After a while, the store keeper has forgotten about the units and stacks boxes and displays right in front of the fog ejector of the devices.

ELECTRICAL CONNECTION

The ***BANDIT*** 240 DB is equipped with simple and yet versatile wiring schemes. This version is adjustable through internal dip switches. The disadvantage of this system is the restriction of possible adjustments, while the big advantage is that it can be installed and adjusted without using PC/laptop or an external adjustment through data or phone connection.
This unit is intended to be connected to an existing alarm system, without taking care itself of complex tasks.
The built-in electronic system takes care of controlling and securing:
- the fog generator (2 x temperature + frequency control of valve).
- sabotage guard of rear cover, *HY-3* pack hatch and optional connected "Control Box".
- control of front- and PCB LED's.
- read out of inputs and dipswitch adjustments.
- control of tamper-, technical-, guard- and alarm outputs.
- control of internal battery, glass fuses and internal fan.
- digital and analogue communication with the *HY-3* pack.

The complete electrical system is accessible by removing the rear cover of ***BANDIT*** (unscrewing 4 x M4 cross head screw). The rear cover is tamper secured, so be sure that the unit is not in guard mode and that the control room (optional) is warned.

Connection to the mains power supply: on the left, beneath the PCB, you'll find a 3 way terminal block with integrated main fuse. The PCB is marked with "230 VAC supply". Connect the left connector strip(N) to the mains neutral (blue wire), the middle one to the yellow/green earth grounding wire and the right connector strip (L) to the mains phase (brown or black wire). Switching phase and neutral has no effect to the function of ***BANDIT*** .
The unit is secured for mains failures and can be practically seen as an Ohmic power load.

Connect the power cable through the strain relief connector (~1 cm beneath the left entrance in the metal back frame).

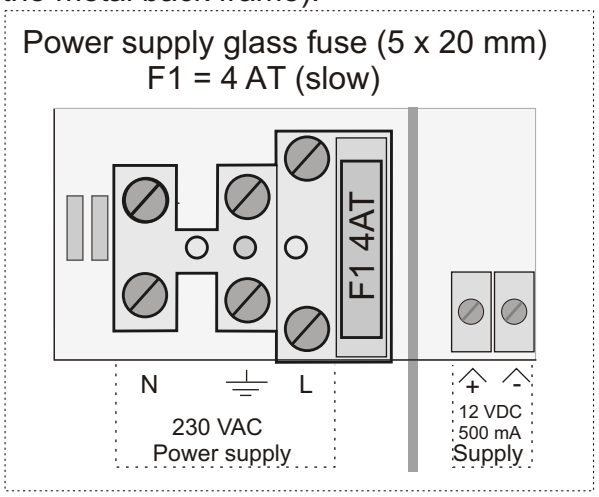

- Preferably use a separate fuse, directly coming from the main power supply or connect to existing power circuit of installed controlling alarm system ***(BANDIT*** has a peak current consumption of 3.5 A for each unit).
- For easy installing, use flexible connection wires 3 x 1.5 mm² with end splices.

- For complete PCB (printed circuit board) layout with description of connector strips, see page 9.
- For detailed description of LED functions, see page 21 through 23.

PCB layout

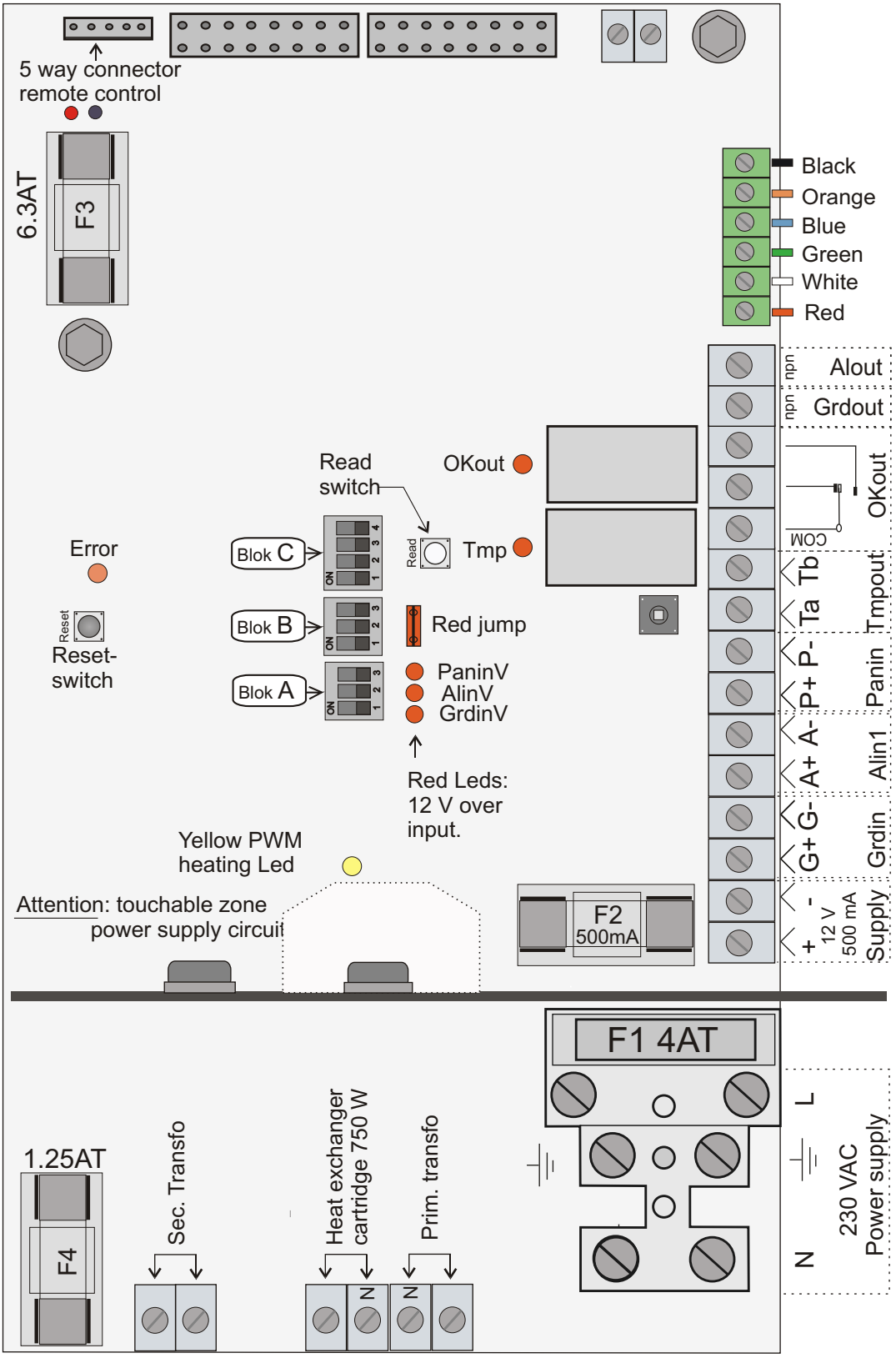
5 way connector
remote control
6.3AT
F3
Black
Orange
Blue
Green
White
Red
6 x Control box
PCB connectors
Alout
Alarm output
Grdout
Guard output
OKout
Technical output
COM
Tb
Ta
Tmpout
Tamperloop
output [Tampout]
P-
P+
Panin
Panic input
A-
A+
Alin1
Alarm input
G-
G+
Grdin
Guard input
-
+
12 V
500 mA
Supply
12 V power supply
external use [Supply1]
(max. 500 mA)
Read
switch
OKout
Tmp
Read
Error
Blok C
Blok B
Blok A
ON
Reset
Reset-
switch
Red jump
PaninV
AlinV
GrdinV
Red Leds:
12 V over
input.
Yellow PWM
heating Led
Attention: touchable zone
power supply circuit
F2
500mA
F1 4AT
L
N
230 VAC
Power supply
Power supply
terminal block with
integrated fuse
(4 AT slow)
1.25AT
F4
Sec. Transfo
Heat exchanger
cartridge 750 W
Prim. transfo
N
N

Inputs

All inputs are equipped with opto-couplers, which provide a perfect separation between the internal ***BANDIT*** electronics and the “outside world”. This way, all unwanted disturbing signals, caused by lightning, induction or R.F. tensions, are kept outside.

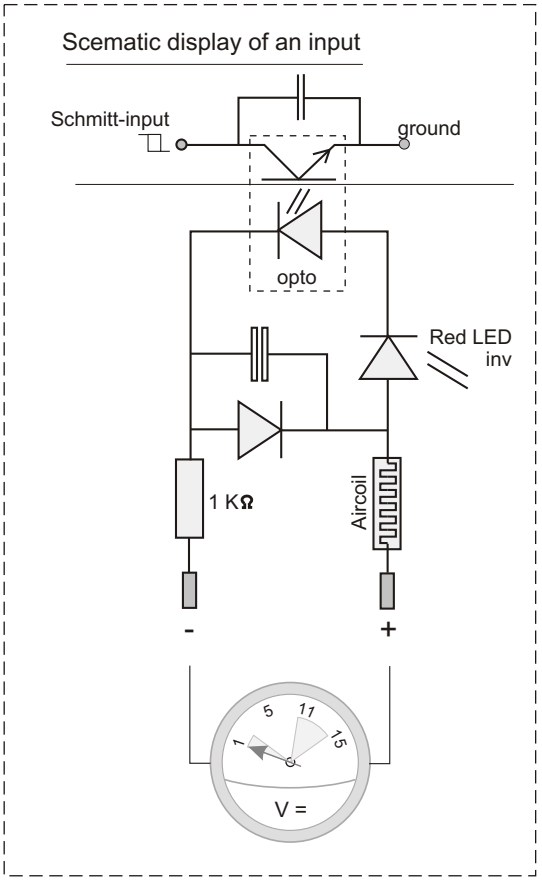

Electrical properties of an input:
- polarised (+ and - signs beneath connectors on PCB.
- secured for possible polarity reverse and equipped with RC- and LC- filter.
- an input has to be stable for at least 0.2 seconds before the new situation is accepted.
- the connected voltage can be either from an external source or from the 12 V ***BANDIT*** supply source itself [Supply].
- the input current with 12 V is ~ 10 mA each input.
- each input is equipped with a schmitt-input, after the opto-coupler. The trigger voltage is approximately 6 V with hysteresis of + and - 1V. This way, unreliable input voltages are being avoided as much as possible.

After adjustments: check the voltage over the inputs.
- Consider < 2 V as no volts.
- Consider > 9 V as 12 V .

Voltages between 2 and 9 V are not normal and will cause problems sooner or later.

The device, model 240DB , is equipped with 3 inputs. Unlike other Bandit models, where every in- and output is free adjustable, in this 240DB model, the function of each input is fixed through hardware settings in the PCB structure.
You’ll find a detailed description of each input function on the following pages.

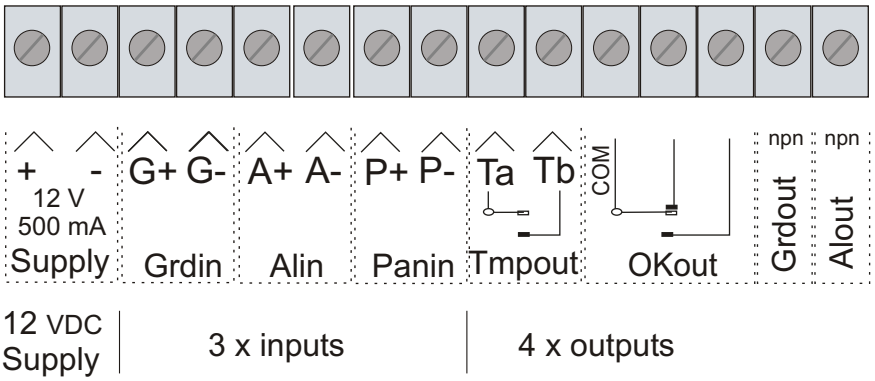

Guard input [Grdin] (G+ / G-)

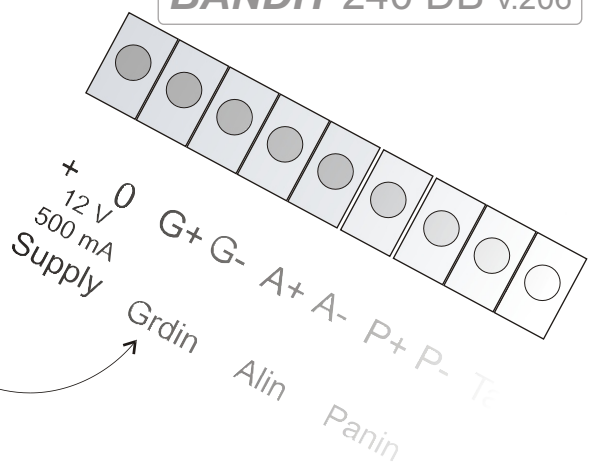

Through this input ***BANDIT*** is told the alarm system is in 'guard' mode.
As long as this message is valid, the unit also will be in 'guard' mode'. Only if ***BANDIT*** is in guard mode, is it possible to proceed to alarm mode through activating the alarm input.

Properties of the "guard"mode:

- The red LED "Guard" on the front panel will light up, as long as the unit is in 'guard'mode.
- Eventual LED-warnings on the front panel such as: failure, HY-3 and power? stay off in all circumstances. The green OK-LED on the front pannel reamins on. This way, a unit which is in 'guard' mode will never show the outside world, that there might be a possible technical failure.

Configuring the guard input [Grdin]:
This input can be activated either with 12 V supply or without power supply. Depending on the position of dipswitch A1, the guard mode will be active with 12 V supply over the input, or active without power supply over this input.
As long as there is a 12 V supply over this input, the red PCB Led [GrdinV] will be on.

Logical truth chart for the guard input [Grdin]:

	Dip **A1** ON		Dip **A1** OFF		
	12 V over Grdin	No power supply over Grdin	12 V over Grdin	No power supply over Grdin	
PCB LED GrdinV	On	Off	On	Off	GrdinV LED is on as long as there is 12 V over Grdin
Guard mode	Yes	No	No	Yes	The red frontLED "Guard" is on, as long the guard mode is active (unit in guard mode).

☞ This guard input [Grdin] is ignored if:
a) there is attached an optional remote control, **and**
b) channel 1 and/or 2 (through Dip B1and B2) of this remote control is adjusted as guard input.

So if a channel of the plugged-in remote control is selected as guard input, input [Grdin] as well as Dip A1 has no function or influence.
See also p 25, Dipblock B and remote control.

Alarm input [Alin] (A+ / A-)

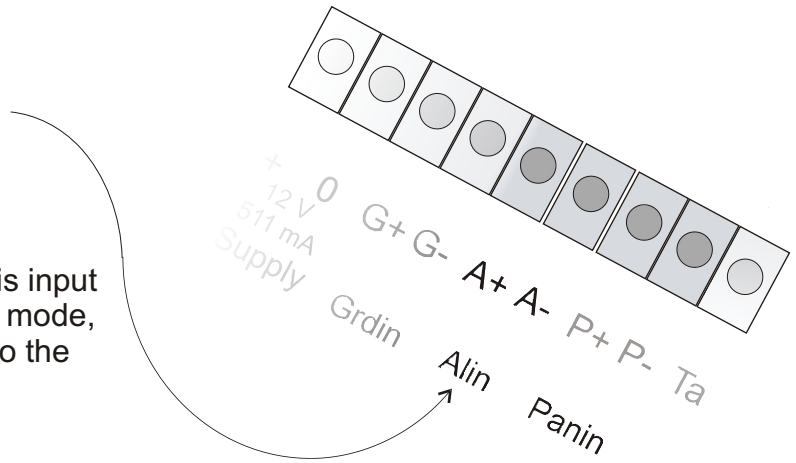

Through this input ***BANDIT*** is told the alarm system or burglar detector generates a burglar report.
If an alarm signal is offered through this input (start pulse) , while the unit is in guard mode, the ***BANDIT*** immediately will proceed to the alarm mode (so starts fog ejection).

Properties of the "alarm mode":

- The red LED "Alarm" on the front panel goes on from the moment the alarm mode starts and goes off as soon as the unit is put out of guard mode (see page 11 "guard mode").
- As soon as the "alarm mode" starts, also the fog expulsion starts (fog ejection time is adjusted through dipblock C, see page 25). A running fog expulsion can only be interrupted through deactivating the guard mode([Grdin] not active).
- If a fog expulsion period is terminated , a period of 3 minutes is added as “dead period”. A new alarm pulse over [Alin1] after these 3 minutes , will start a new fog expulsion period. See also page 21, under- temperature protection.

Configuration of the alarm input [Alin]:
Depending on the A2 dip switch position, the alarm input will start a fog expulsion with a negative or positive edge transition (flank). As long as there is 12 V over this input, the red PCB Led [AlinV] will be on.

Logical truth chart for the alarm input [Alin]:

	Dip **A2** ON		Dip **A2** OFF		
	12 V over Alin	No power supply over Alin	12 V over Alin	No power supply over Alin	
PCB LED AlinV	On	Off	On	Off	Alin1V LED is on as long as there is 12 V over Alin
Start alarm mode	Only with positive edge of 0 ⎍ 12V	No	No	Only with negative edge of 12V ⎌ 0	Extra pulses over [Alin] during a fog expulsion have no influence.

☞ If an optional remote control is connected [Alin] will maintain its normal function.
So there can be also triggered a valid alarm pulse through remote control (ch1 and/or 2) as through [Alin].
Also see page 25, Dip block B and Remote control.

Panic input [Panin] (P+ / P-)

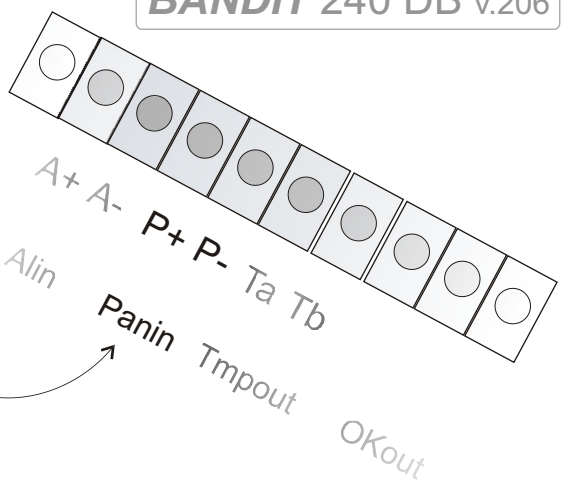

Through this input ***BANDIT*** can be switched directly to “alarm mode” (fog expulsion), bypassing guard mode. Normally this input is used to connect a panic switch.

Properties of the panic mode:

- The red LED "Alarm" on the front panel will blink,
- as long as the unit is in panic mode.
- As the "panic mode" starts, a fog expulsion will take place (the fog expulsion period can be adjusted through dip block C, see page 25). A running panic fog expulsion can only be interrupted by switching off the panic mode ([Panin] not active).
- If the fog expulsion period is terminated and/or interrupted and a new panic mode is activated through [Panin], a new panic fog expulsion period will start. Also see page 21, under temperature protection.

Configuration of the panic input [Panin]:
This input can be activated either through 12 V supply or without power supply. Depending on the position of dip switch A3, the panic mode will be active with 12 V supply or when there is no power supply over this input.
As long as there is 12 V over this input, the red PCB Led [PaninV] will be on.

Logical truth chart for the panic input [Panin]:

	Dip **A3** ON		Dip **A3** OFF		
	12 V over Panin	No power supply over Panin	12 V over Panin	No power supply over Panin	
PCB LED PaninV	On	Off	On	Off	PaninV LED is on as long as there is 12 V over Panin
Panic mode	Yes	No	No	Yes	The red frontLED "Alarm" is blinking, as long as the panic mode is active.

☞ This panic input [Panin] is ignored if:
a) there is connected an optional remote control, **and**
b) channel 1 and/or 2 (through Dip B1 and/or B2) of this remote control are adjusted as panic input.
So if channel 1 and/or 2 (ch1 & ch2) of this optional remote control are selected as panic input, input [Panin] as well as Dip A3 have no influence.
Also see page 25, Dip block B and Remote control.

Outputs

The unit has a total of 5 outputs:
1. The 12 volt supply output [Supply] (fixed defined). See further on this page.
2. The sabotage loop output [Tmpout] (fixed defined). See page 15.
3. [OKout] is a technical failure output. See page 16.
4. [Grdout] is a npn-transistor output, active with guard mode. See page 17.
5. [Alout] is a npn-transistor output, active in with alarm mode. See page 18.

The properties of the different outputs are described as follows:

Output: 12 V supply [Supply]:

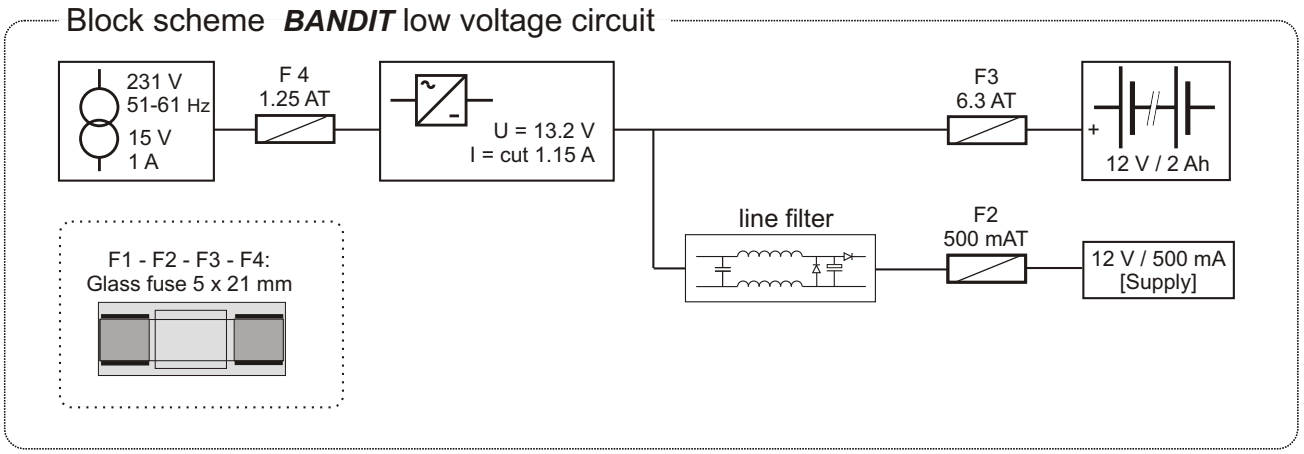

The [Supply] output can offer a maximum of 500 mA (restricted by F2). In normal conditions and with full charged battery under loading current, the voltage is ~13 volt.This voltage is practically ripple free (10mV ripple) and is used as supply for small external power users, such as external inner siren, Jumbo-LEDand PIR-sensors. It is also a useful power supply for external relay contacts, to send back voltage signals to the inputs of the unit.
The presence of this 12 V and the good condition of F2 is continuously being checked through ***BANDIT***-internal electronics. If a fuse blows, the frontLED "failure" and the red PCB error LED will blink and the technical output [OKout] switches to rest condition.
As a precaution, make sure the continuous load rate of this output [Supply1] isn't higher than ~450 mA.

☞ It is important that ***BANDIT*** power supply <u>never</u> interferes with the power supply of the controlling alarm system or with other devices which also have their own power supply. Also never connect the grounds with each other. This can result in unexpected earthloops (high potential differences, especially in case of lightning and similar overloads) with all bad consequences.

Output: sabotage loop [Tmpout]:

There are two built-in sabotage switches in the appliance (tampers):
1. Through a spring against the rear cover
2. Through a tamper pin, which is built-in in the HY-3 pack , against the side hatch.

Block scheme ***BANDIT*** sabotage loop (tamper)
This is a display of the principle, not a real scheme extract

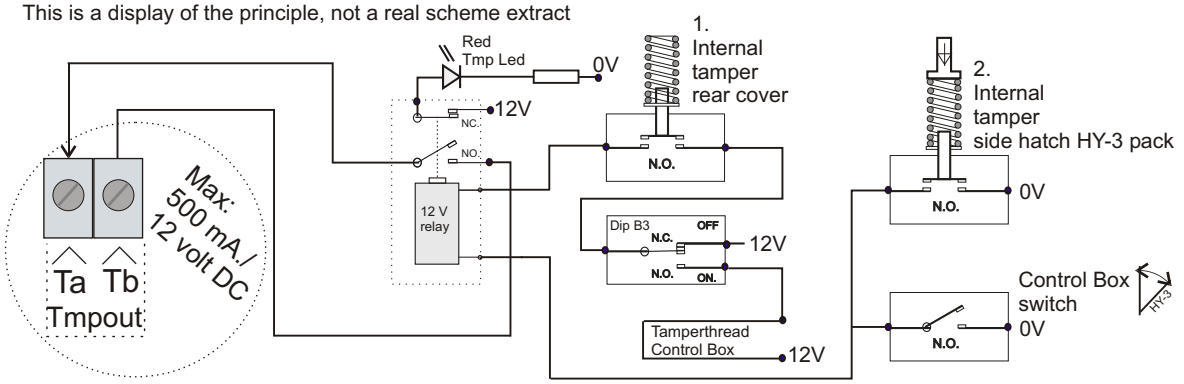

The output connector [Tmpout] has to be integrated in the sabotage loop of the controlling alarm system.

The tamper contact [Tmpout] is only closed (red Tmp Led off) **if:**

a) The rear cover is closed. If you want to perform a tamper loop test while installing:
Push-in the spring of the tamper of rear cover. If the tamper circuit is ok, the red Tmp LED will go off as long as you keep the tamper spring pushed-in.
b) A HY-3 pack is in the unit and the side hatch is closed.
c) - there isn't connected an optional"Control Box":
Position dip switch B3 = on (Control Box option not connected).
- there is connected an optional "Control Box" and if there is a confirmation of connection:
Position dip switch B3 = off (Control Box option connected):
The "Control Box" tamper thread correctly connected and not interrupted.

☞ By switching the second button on the "Control Box" (sign:) to on (green LED on push button is on and "internal failure" frontLED blinks fast), the side hatch can be opened and the HY-3 pack can be replaced, without interrupting the tamperloop.
For more info concerning the Control Box, see page 24.

☞ If the side hatch and/or the rear cover are being opened while the unit is in guard mode, it will switch immediately to alarm mode and perform a fog expulsion for the set period. This "sabotage" fog expulsion can not be interrupted by switching the unit into guard mode. For more info concerning Control Box, see page 24.

Output: failure output [OKout]

This is a relay with potential free contacts. They provide a perfect separation between ***BANDIT*** internal electronics and the “outside world”.

Schematic display of a relay output [Okout].

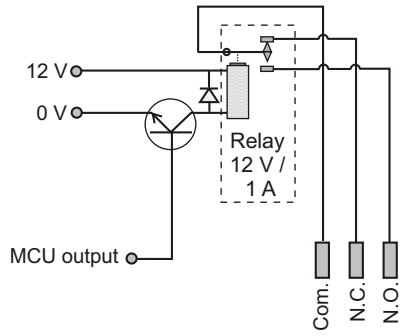

Electrical properties of a relay output:
- potential free
- maximum 1 Amp load with 24 V.
- spark suppressors (varistors or run-free diodes) over contacts, for switching inductive loads (relay coils, etc.).
- in case of an internal 12 V supply failure (<8 V.) or the MCU resets or is being reset, this output will switch to its rest position(COM and NC closed).

This relay contact is represented by 3 terminal connectors [Okout] on the PCB.
COM is the common contact. COM and NO are closed (relay operated) as long as there is no internal failure detected through ***BANDIT*** internal electronics.
As long as internal failure is detected, the [OKout] contact is in rest (COM and NO open) and the red [OKout] PCB Led will go on (see PCB layout on page 9).
BANDIT-electronics can detect the following internal failures:
- The glass fuse F2 (500 mA of [Supply1]) is interrupted.
- The glass fuse F3 (6.3 A battery fuse) is interrupted.
- There is no battery present or the battery load is too low.
- The environment temperature of the built-in HY-3 pack is above 50°C.
- The temperature of the heat exchanger is too low to admit a fog expulsion. This can mean:
  a) the internal over-temperature fuse is interrupted
  b) the heat resistance of the heat exchanger is faulty
- The internal fan isn’t functioning correctly.
- The unit is asking more than 7 days for a replacement of the HY-3 pack. This item is no real failure but an abnormal situation on which the reliability is endangered due to too less reserve of fog fluid. See also page 26, replacement of HY-3 pack.
- A lack of presence of mains supply for more than 15 minutes (mains or head fuse F1).
- The MCU is measuring abnormal values through the inputs of its sensors.
- An abnormal condition has remained present for more than 3 hours. This abnormal condition is indicated through the fast blinking of the “Failure” front led. This is: Red jumper isn’t plugged in and/or one or both “Control Box” switches are still on active positions (or).

As soon as the internal failure is restored, the failure indication will disappear automatically and the normal situation will be restored: [OKout] enforced (COM and NO closed) and the red [OKout] Led on the PCB will go off.

A common application for this useful [OKout] output is to connect this output to a programmable input of the alarm system or an auto-dialer. This way it’s very simple to report through phone reports or other means of communication to the control rooms (PAC's) that there may be ***BANDIT*** problems.

Output: guard output [Grdout]

This output is a npn-transistor output, so not potential free. This transistor output switches between floating and 0 [Supply].

Schematic display of the alarm output [Alout] and guard output [Grdout]

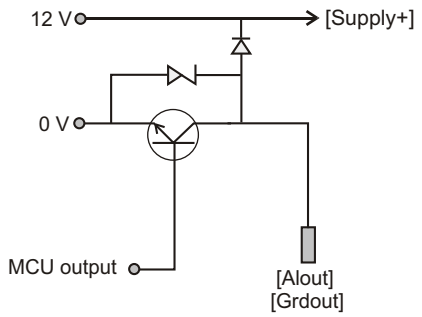

Electrical properties of a npn-output:
- not potential free, switches [Supply-] on or off.
- maximum 200mA continuous load at 12 Vdc.
- equipped with run-free diodes to switch small inductive loads, such as 12 Vdc relays, etc.
- if the MCU resets or is being reset, this output will switch to floating
- The transistor is a zener-clamp secured DMOS with in conduction resistance of 1,3 Ohm.

☞ Direct short circuit of. [Supply+] means the transistor will be broken, return unit to company, out of warranty!

This npn-transistor output is represented on the PCB by print-connectors [Grdout].
The transistor conducts as long as the unit is in guard mode.
The transistor output floats as long as the unit isn't in guard mode.

A common application for this handy [Grdout] output is to connect this output through a separating relay with an auto dialer (report the guard mode) or to switch directly a Jumbo-Led(s).

Jumbo-LED option

Jumbo-LED is a little waterproof box as big as a box of matches with integrated 12 V LED of 2 cm diameter. Is used to warn bypassers an alarm system is in guard mode. Cheap, free of maintenance and as a preventative warning it is as efficient as a visible outer siren. For the owner, it is a clear sign that ***BANDIT*** is in guard mode.

Function: as long as ***BANDIT*** is in guard mode, this Jumbo-LED will blink (~ 1 Hz). A maximum of two Jumbo-LED(s) can be connected on [Grdout] .

Blue and black wire make a closed loop, which eventually can be integrated in the sabotage loop.

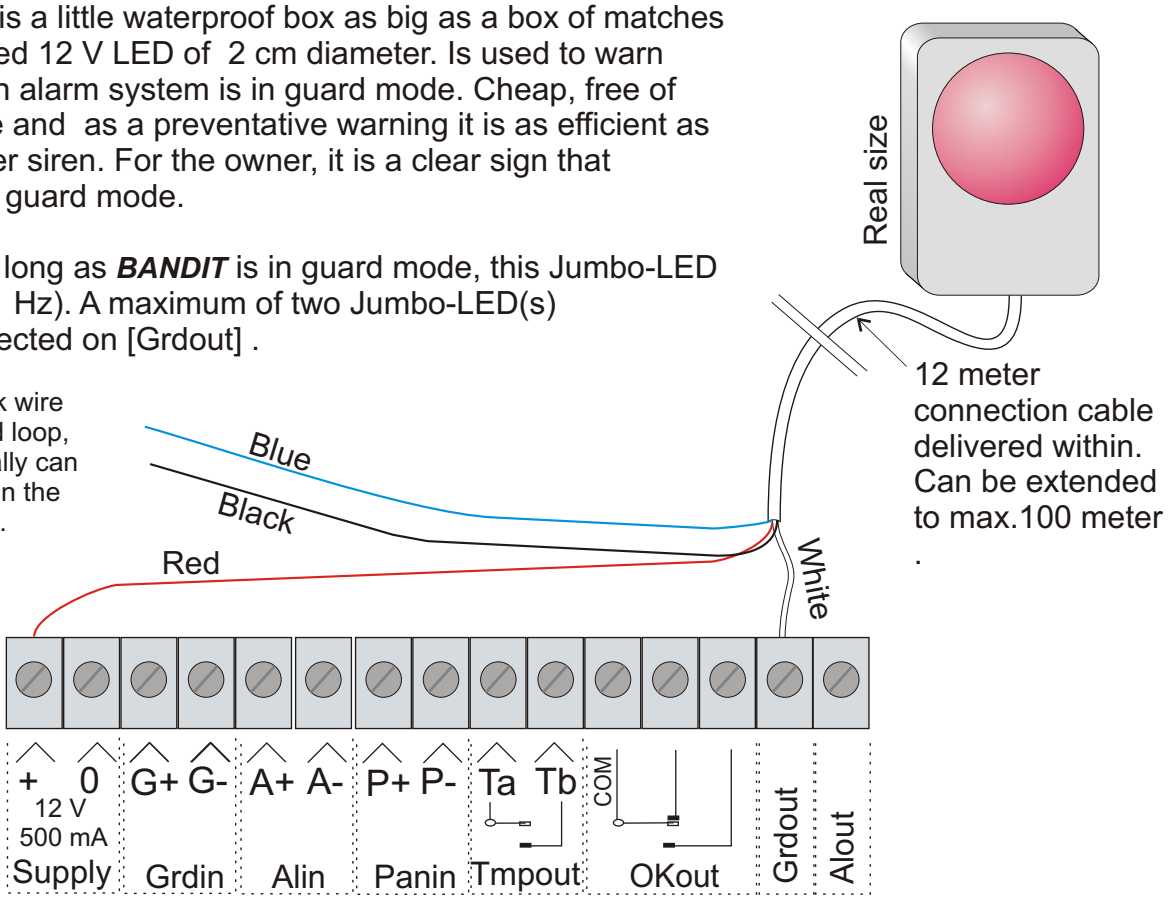

Output: alarm output [Alout]

This output is a npn-transistor output, so not potential-free. This transistor output switches between floating and 0 [Supply-].
For properties of a npn-transistor output, see previous page 17.

This npn-transistor output is represented on the PCB by connectors [Alout].
The transistor conducts as soon as the unit switches to alarm mode or to panic mode.
The transistor output floats if:
a) the panic mode is switched off, or
b) automatically, 3 minutes after the last fog expulsion.
c) the running alarm mode is switched off because the unit's guard mode has been switched off through the guard input.

A common application of this handy [Alout] output is to connect this output through a seperated relay with an auto dialer (to report the alarm condition) or to activate/deactivate directly an external siren.

Control Box

The "Control Box" is the most used and requested option which comes with the ***BANDIT*** 240DB. It permits the installer to easily perform unit tests during the annual inspection and easily open the side hatch in order to change the HY-3 pack

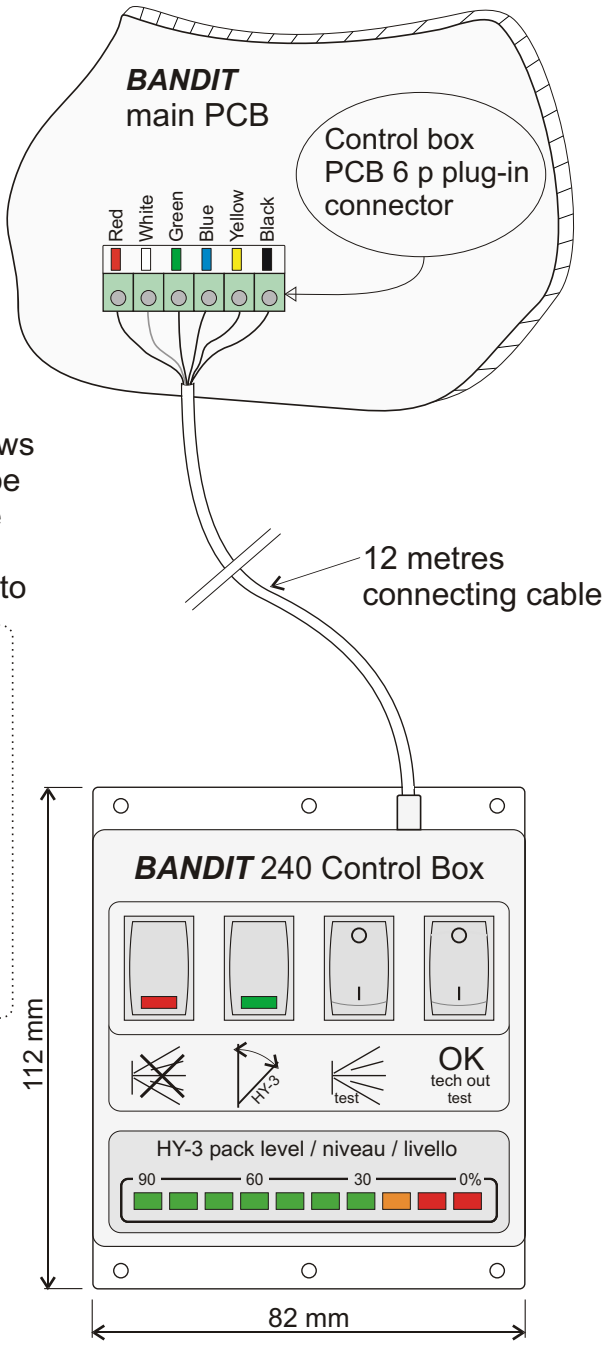

Installation:
The box has to be installed in an access secured housing. Normally the "Control Box" is installed in the housing of an existing alarm panel. The required screws and nuts are delivered with the box. The box cannot be opened, the inner electronics and connecting wire are sealed within. The sealed in connecting wire has a standard length of 12 metres. If it should be too short to reach the ***BANDIT*** , it can be extended with a max. of 100 metres, using a standard 6 way alarm wire.
Normally connect colour to colour (best separately soldered) and insulated and finished with a general insulation over the complete wire. In the packing of the “Control Box” you’ll find the mounting screws and nuts, also a 6 way plug-in connector with screw connection.
First insert the connecting wire through the input swivel of the unit. Then strip the strands and connect to colours identified on the plug.
Slide the male plug on to the 6 way female connector on the PCB (see p 9, PCB lay-out to locate control plug-in connector). Switch dip B3 to OFF (0) and push the read switch (read = update with dipswitch adjustments).
The wire and signal strains are sabotage secured through the unit.

If explicitly requested while ordering, the "Control Box" can be delivered with requested length of the connecting wire (max 100 meter) and wire colour (white or brown). Each extra meter wire is charged with 1.71 € + VAT

Consider well while installing that the person who has access to the "Control Box", also is in control of the functioning of the *BANDIT* fog generator.

If it is not possible to mount the "Control Box" within the inner housing of an existing alarm installation, you’ll have to install the "Control Box" in a key and sabotage secured metal box, in a location which can’t be reached without being detected from at least one burglary detector.

For exact functions of the different switches and LED-bar, see next page.

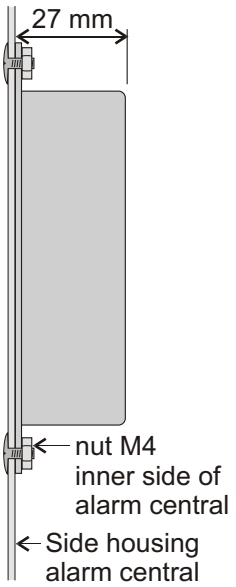

Operation and function:

- Bistable switch:

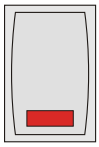

With this switch the fog generator is disconnected (so no fog ejection) Same function as “Red Jump” on PCB.
With active switch:

- The internal electronics continue to function as normal, but ***BANDIT*** will always refuse to perform a fog ejection.
- The front LED "internal failure" blinks fast (~2Hz).
- The red LED on the switch is on.

This switch permits you to put the controlling alarm system into an alarm simulation, whereby the ***BANDIT*** is also triggered, but without filling the room with fog.

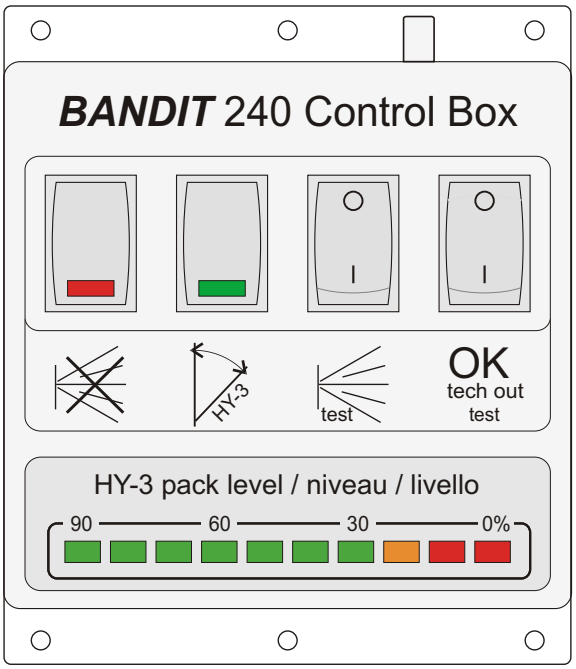

- Bistable switch:

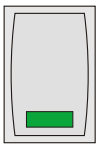

If the side hatch (in order to replace the HY-3 pack) is being opened, the unit will interrupt the internal sabotage loop. If this opening is done while the unit is in guard, the unit is going to perform a fog ejection. With this switch, you can prevent this sabotage reaction
With active switch:

- The tamper output stays closed, so no sabotage notice or fog expulsion while opening the side hatch.
- The green LED on the switch is on.
- The front LED "internal failure" blinks fast (~2Hz).

- Monostable switch (pulse switch)

This allows a fog ejection test, each time this switch is pushed in, ***BANDIT*** will perform a fog ejection for one second.

If the volume of the ejected fog during this one second is enough and normal, you can be sure that it also will be OK for longer adjusted fog ejection periods. Before performing a fog ejection test, see safety precautions on page 3.

- Monostable switch (pulse switch)

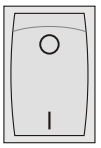

As long as this switch is pushed in, the technical output [OKout] will be in rest (COM and NO open), so an internal failure Will be simulated. This way an internal failure signal by ***BANDIT*** can be checked if it is treated and transmitted correctly.

- HY-3 pack level LEDbar (dot mode)

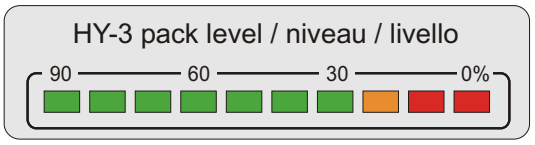

This "LED bar" gives the actual usable percentage of volume of HY-3 liquid in the HY-3 pack.
As soon as the orange LED is lit, you’ll have to replace the HY-3 pack. The unit also will have its red HY-3 LED on the front panel blinking.
If there is less than 30% of HY-3 liquid in reserve (30% = ~15 sec. of fog ejection time available), you’ll have to replace the HY-3 pack with a filled one.

COMMUNICATION STATUS

The unit gives following visual information to its immediate surroundings:

FRONT LEDs:

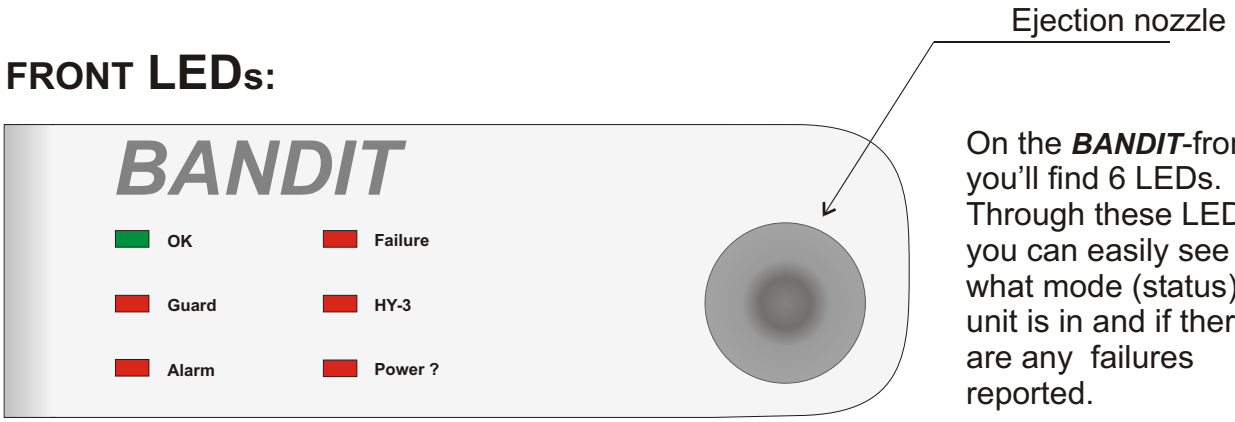

On the ***BANDIT***-front you'll find 6 LEDs. Through these LEDs you can easily see what mode (status) the unit is in and if there are any failures reported.

Available (OK)

- If ***BANDIT*** is not in guard mode:
  - This green LED is lit when:
    a) there is no internal failure detected
    b) the unit is on it's required temperature (temperature high enough to be operational, and to perform a fog ejection).
    Practically, this means: as long as the green LED is on, the unit is ready.
  - This green LED blinks if:
    a) no internal failure is detected, **and**
    b) the unit is warming up. As soon as it gets its required temperature, it will be ready to perform a fog ejection. If the main power supply is present, the unit needs approximately 50 minutes (from cold condition) to reach its final regulation temperature.

- If ***BANDIT*** is in guard mode:
  This green LED will be on. This way the unit will never reveal through its front panel the possibility of not being ready.

☞ One of tasks of the integrated "Power Saver" is to take care that the temperature of the heat exchanger will not raise higher than necessary to produce the adjusted fog quantity. The temperature of the heat exchanger for a fog ejection adjustment of for example 5 seconds, is 30°C lower than for an adjusted fog ejection of 15 seconds. So if you change the fog ejection volume, automatically you'll also change the temperature of the heat exchanger. If there is enough difference between the 'old and lower' ejection period and the 'new and longer' one, the green LED will start blinking to show that the unit has not yet reached its new higher temperature.

☞ During a fog ejection period, the temperature of the heat exchanger decreases.The longer the fog ejection period, the more the temperature will decrease. If the temperature decreases so much, that it would endanger the fog quality, the unit first of all is going to warm-up again before performing a new fog ejection (under-temperature protection). During this excessive warm-up the green OK LED will blink to show that the unit isn't ready yet. As soon the blinking turns into continuous on, a new fog ejection can be performed.

Guard

This red LED is on as long as ***BANDIT*** is in guard mode.

Alarm

This red LED is on from the moment ***BANDIT*** switches to alarm mode until the unit is put out of guard mode through the guard input [Grdin] or an optional remote control.
This LED blinks as long as the unit is switched into panic mode

Internal failure

- This red LED blinks (~ 1 Hz) as long as ***BANDIT*** detects one or more internal failures. The unit practically checks continuously on possible internal failures.
  Check list of possible internal failures:
  - the glass fuse F2 (500 mA) which secures [Supply] 12 V power supply is interrupted
  - the heat exchanger can not reach the required temperature due to a broken element and/or the over temperature fuse has blown.
  - the glass fuse F3 (6.3 AT) which functions as battery fuse is interrupted.
  - the charge of the connected battery is too low (bad battery or no battery present).
  - the revs of the internal fan aren't right
  - the environmental temperature of the HY-3 pack is above 50°C.
  - the MCU measures unreal values or value jumps on one or more of its sensors, which indicates broken sensor(s).

- This red LED blinks fast (~ 2 Hz) as long as ***BANDIT*** detects one or more adjustments, which are no real technical failures, but have influence on the normal operational behaviour of the fog generator:
  - "'Red jump" isn't plugged in.
  - A "Control Box" switch is still ON.
  - The presence of a wrong type of HY-3 pack.

HY-3 pack (*HY-3 pack* liquid reserve)

With a charged *HY-3 pack,* ***BANDIT*** has 1.4 litre of *HY-3* liquid.
During a fog expulsion, approximately 28 ml of fluid is consumed each second.
So basically, there is a total of ~ 50 seconds of fog expulsion available.
This LED starts blinking as soon as there is less than 15 seconds of fog ejection time available.
If this red HY-3 LED blinks, the *HY-3 pack* has to be replaced. See page 26.
The actual fog fluid level can always be read off from the Control Box. See page 19.

As long as ***BANDIT*** is in guard mode, this LED will be off. This way the unit never will reveal a possible shortage of fog fluid, through its front panel, to the outside world.

Power failure (Power ?)

This red LED blinks as long as ***BANDIT detects*** its power supply or its main fuse F1 is interrupted **and** the unit is not in guard mode.

☞ If ***BANDIT*** is disconnected from the main power supply for more than 3 hours, the internal heat exchanger will cool down too much to have a decent performance. ***BANDIT*** will detect this and will refuse to eject fog. Fog ejected through a too cold heat exchanger is wet, which could damage the surroundings (greasy film on textile, documents, furniture, etc...). As soon as the main power supply is available again, the unit will start to re-heat its heat exchanger and to re-charge its internal battery.

Informative PCB LED

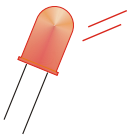

Error LED (red LED, location on PCB, see page 9):

BANDIT reports its internal failure through its front LED "Failure" and its technical output [OKout]. To provide the installer with more information about the kind of failure reported, there is located a red error info-LED [Error] on the PCB. If this LED starts blinking, a failure is reported, whereby the frequency of blinking reveals the kind of failure.
The blinking sequence is built up in repeating time blocks of 10 seconds.

Blink-frequency	**Reported failure**	**Action installer**
1 x	Glass fuse F2 and/or F3 blown	Check F2 and/or F3
2 x	Charge of disconnected battery too low	Battery problem
3 x	Charge of connected battery too low	Battery- or power supply problem.
4 x	HY-3 pack above 50°C.	Environmental temperature too high or dusty textile front
5 x	The MCU measures unreal value(s) on the Control Box PCB-connector.	Control Box connecting cable and/or check position dip B3.
6 x	Internal MCU failure	Push-in reset switch, if no success, back to factory
7 x	Incorrect temperature of heat exchanger	Back to factory
8 x	Ventilator doesn’t turn	Back to factory
9 x	The MCU measures unreal value(s)	Back to factory

With simultaneous failure reports, e.g. "F3 blown" and "load connected battery too low", this LED will blink 1 x every 10 seconds. If the first failure is restored, in this case “fuse replaced”, the LED will blink 3 x every 10 seconds to report the next failure, in order of the list above.

DIP-SWITCH ADJUSTMENTS

Through dip-switch adjustments, you can easily program the needed features. Unlike other ***BANDIT*** models, which can be programmed in a wide range through PC and/or remotely, the adjustment through dip switches is very simple. This simple method of adjustment, offers all needed elementary adjustment possibilities which permits the unit to function in a very straightforward way.

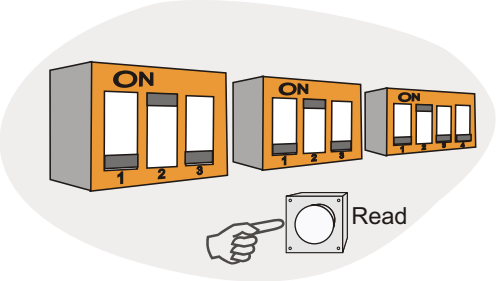

The PCB is equipped with a total of 10 dip switches, divided over 3 blocks, A, B and C.
To change an adjustment: first change position dip switch, than push-in 'read' switch (read).
Only after releasing this switch, ***BANDIT*** will read out and execute the new adjustments of the dip switches.

Dip block A: 3 dips, additional info inputs: see page 11 through 13

Dip A1: Configuration of guard input [Grdin].
- Guard mode as long as there is 12 V over [Grdin], dip A1 position 'on' (1).
- Guard mode as long as there is 0 V (no voltage) over [Grdin], dip A1 position 'off'(0).

Dip A2: Configuration of alarm input [Alin1] (start pulse).
- Alarm mode starts as soon as there is 12 V over [Alin], dip A2 position 'on' (1).
- Alarm mode starts as soon as there is 0 V (no voltage) over [Alin], dip A2 position 'off' (0).

Dip A3: Configuration of panic input [Panin].
- Alarm mode as long as there is 12 V over [Panin], dip A3 position 'on' (1).
- Alarm mode as long as there is 0 V (no voltage) over [Panin], dip A3 position'off' (0).

Dip block B: 3 dips.

The unit is prepared to have connected an optional wireless remote control. This gives you the opportunity to incorporate and to adjust easily a 2-channel receiver (order code receiver: A/N 881, transmitter(s): A/N 891).
As soon as the female 5-way connector of the receiver is plugged-in on the male PCB connector, the unit "knows" a remote control is present. Pushing in the read switch, the adjustment of B1and B2 will be valid, read out and executed. The position of dip switches B1 and B2, determine the function of both channels (ch1 and ch2). There are a total of 4 adjustment combinations:

- Both transmitter buttons function if guard mode is on/off. Put B1 and B2 position 'off' (0). The normal guard input [Grdin] has no function anymore (ignored).
- Both buttons function if panic mode starts/stops. Put B1 position 'off' (0) and B2 position 'on' (1). The normal panic input [Panin] has no function anymore(ignored).
- Left button is guard mode on/off and right button is panic mode start/stop. Put B1 position 'on' (1) and B2 position 'off' (0). Normal guard input[Grdin] as well as normal panic input [Panin] have no function anymore (ignored).

- Left button is guard mode on/off and right button is alarm mode 'start'. Put position B1 'on' (1) and B2 'on' (1). The normal guard input [Grdin] has no function anymore (ignored).The normal alarm input [Alin] keeps its normal function.

dip **B1**	dip **B2**	Left transmitter button (ch.1)	Right transmitter button (ch.2)
0	0	Guard	Guard
0	1	Panic	Panic
1	0	Guard	Panic
1	1	Guard	Alarm

Dip B3: Announce "Control Box".

- "Control Box" is connected, put position dip B3 'off' (0) and push-in read switch [Read]. The "Control Box" is included in the tamper loop and the control switches of the "Control Box" function.
- There is no "Control Box" connected, put position dip B3 'on' (1)

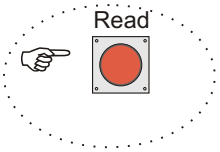

Dip block C: 4 dips, adjustment of fog expulsion period.

BANDIT has a fog capacity equal to a room filling power of 28 m³ per second. To adjust this capacity in proportion to the volume to secure, you can adjust the amount of fog expulsion. The required period of fog ejection is in proportion with following dip switch adjustments:

The first column (volume in m³) shows the volume (floor surface x height) of the room to fill.
E.g. if a room of 161 m³ has to be filled, choose nearest volume, which would be 168 m³, being equal to 6 seconds of fog expulsion. The dip switch adjustment in this case would be: C1 = 0 / C2 = 1 / C3 = 0 / C4 = 0

room volume in m³	Fog expulsion in seconds	dip **C1**	dip **C2**	dip **C3**	dip **C4**
56	2	0	0	0	0
84	3	0	0	0	1
112	4	0	0	1	0
140	5	0	0	1	1
168	6	0	1	0	0
196	7	0	1	0	1
224	8	0	1	1	0
252	9	0	1	1	1
280	10	1	0	0	0
308	11	1	0	0	1
336	12	1	0	1	0
364	13	1	0	1	1
392	14	1	1	0	0
420	15	1	1	0	1
448	16	1	1	1	0
504	18	1	1	1	1

Prevent room overfilling !!!

If there is no natural ventilation during more than 15 minutes (full sealed area), the fog could leave behind a thin film condensation on smooth and/or cold surfaces. As soon there is an air flow (ventilation), this practically invisible and water-soluble thin film will evaporate within 24 hours.

BANDIT Power Saver

The lower the adjusted fog expulsion period, the lower ***BANDIT*** will adjust the temperature of its heat exchanger.

REPLACEMENT OF *HY-3 PACK*

Mechanically, the inside of ***BANDIT*** consists out of 2 main components:
-The heat exchanger: this chrome-steel cylinder is filled with hot gasifying channels, which take care of 'steaming-up' the injected *HY-3* fluid to become a dry fog..
- The *HY-3 pack* with following integrated components: double *HY-3* fluid reservoir, NC valve, fluid filter, over pressure brake plate and electronics for memory data, temperature measurement, expulsion registration and communication. The inside of the *HY-3 pack* is constantly pressurised to ~ 15 BAR.

A filled *HY-3 pack* has a capacity of 1.4 litre (1400 ml) *HY-3* fluid. With a fog ejection, there is approximately 28 ml of fluid consumption each second, which means approximately a total of 50 seconds of fog expulsion available.
The MCU on the main PCB communicates continuously with the present *HY-3 pack* and calculates, by means of the passed through parameters, how much fluid still is available in the*HY-3 pack* .

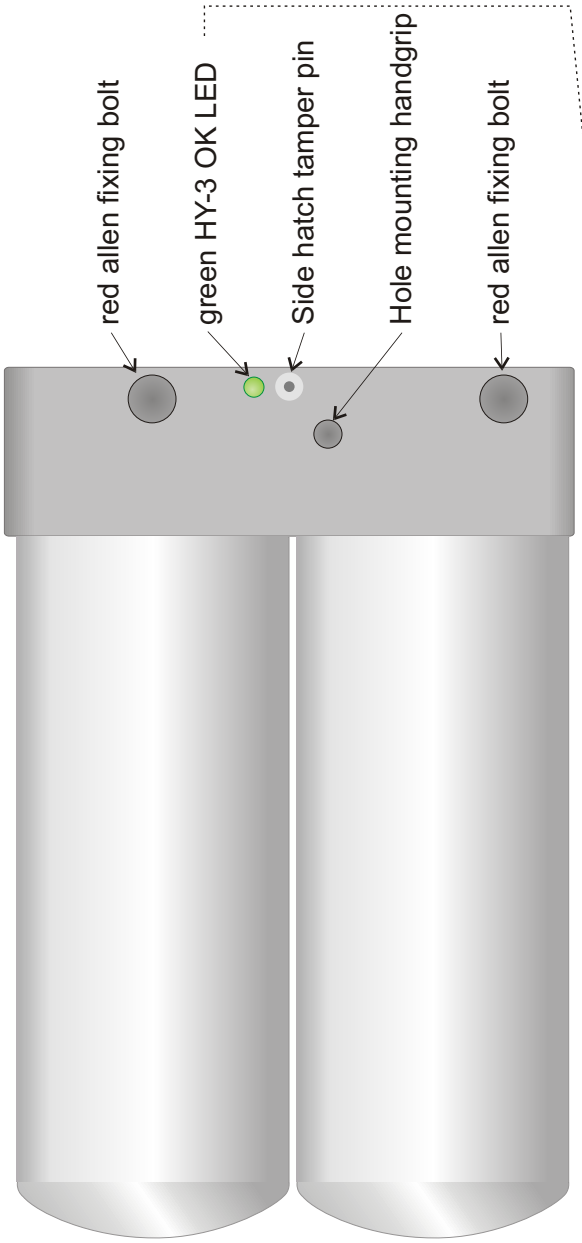

If the level seems to have gone below the adjusted minimum value (see page 22, *HY-3 pack* LED), the unit will request the replacement of the *HY-3 pack*. This is shown in different ways:
- *HY-3 pack* front LED blinks.
- The LED bar on the Control Box shows continuously the measured fluid level.
- If the unit has been asking for replacement of the HY-3 pack for more than 7 days, this abnormal situation will be seen as a technical failure and the [OKout] contacts will be put in rest for reporting this situation (COM and NO open).

Functions of green HY-3 OK LED:

- Continuously on: everything OK
- Blinks: The *HY-3 pack* isn't accepted, because e.g..: demo HY-3 pack, an illegally filled or wrong type *HY-3* fluid (irritant or coloured fog) . The label has to mention RF (Regular Fog).
- Blinks fast (2 Hz): The *HY-3 pack* has to be replaced, because there isn't enough HY-3 fluid left (beneath adjusted minimum level).
- Stays off: there is a fatal communication problem. Check if the sub-D connector is clean, try another *HY-3 pack* or the unit has to return to the factory.

Procedure to change the *HY-3 pack*:

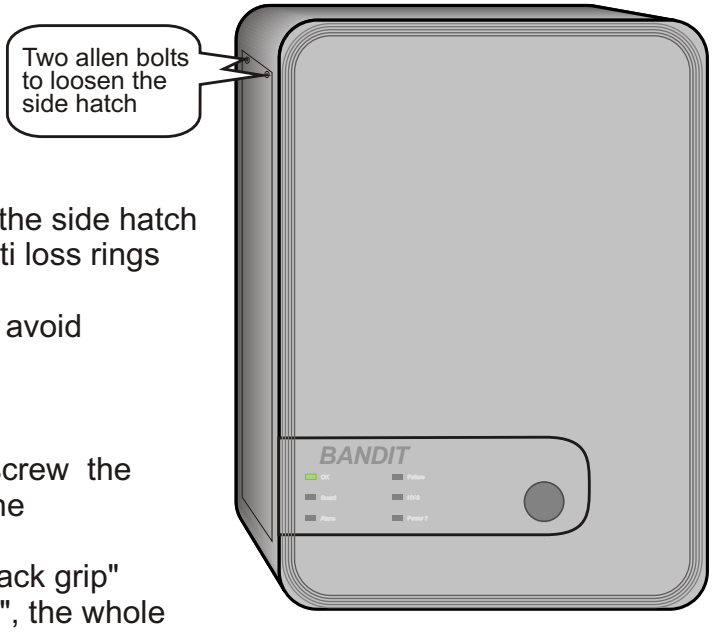

- First of all, the sabotage contact of the side hatch must be switched off. Through the "Control Box" switch, or if there isn't a "Control Box" connected, by bridging the sabotage loop of the controlling alarm system.
- Unscrew by means of the "HY-3 pack grip" the side hatch by loosening the 2 allen bolts (there are anti loss rings on the bolts).
- Remove the side hatch and put it gently (to avoid scratches) on the unit.
- Open the box of the new *HY-3 pack* and put the upper layer next to the box.
- Use the "HY-3 pack grip" allen key #5. Unscrew the 2 red allen-fixing bolts. Put these also on the unit.
- Screw on the M8 thread end of the "HY-3 pack grip" in the M8 hole and pull the "HY-3 pack grip", the whole *HY-3 pack* will slide over the 2 slide pins out of the unit.
- Put the "old *HY-3 pack*" in the upper layer of the *HY-3 pack* box. Unscrew the "HY-3 pack grip" and screw it on the new *HY-3 pack*. Pull off the red transport protection cap and put it on the "old" HY-3 pack.
- Push evenly the *HY-3 pack* over the slide pins into the unit. Press slightly on to make sure the HY-3 pack connector and the liquid coupling are sliding over their respective connector and coupling.
- Unscrew the HY-3 pack grip and fasten both red allen fixing bolts.
- The green HY-3 pack LED will be on continuously (everything OK).
- Remount the side hatch and fix it by fastening both allen bolts. Put the sabotage switch of the side hatch back off (green LED switch and front LED "failure" go off).
- Repack the "old" *HY-3 pack* in the original box (tape it).
- For refilling: ship the box by normal freight to your ***BANDIT***-dealer.

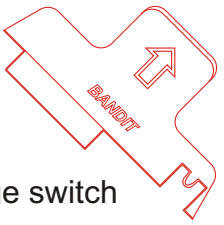

Normally the returned *HY-3 packs* get a technical check, are refilled, memory reset and tested. Additional costs will be incurred if the returned *HY-3 pack* shows deep scratches or dents. Repair cost will be assessed by the company. The costs to repair the *HY-3 pack* into a reasonable condition to sell, will be charged to your account.

Changing the *HY-3 pack*, takes about 5 minutes. You will need a new *HY-3 pack* and the *HY-3 pack grip*, and possibly a ladder to reach a higher installed unit.

With each ***BANDIT*** comes a "*HY-3 pack grip*".

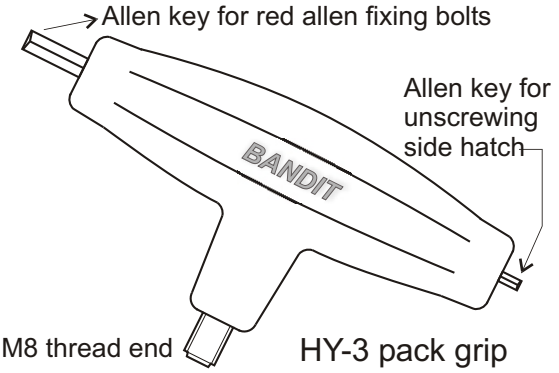

MAINTENANCE

Because ***BANDIT*** is listed as a security device, it is obligatory to regularly perform a function check.

Every year:

- Fog expulsion check and failure report check through[OKout].
- Using the “Control Box” you can easily perform these tests . The LED bar indicates the quantity of HY-3 fluid present in the HY-3 pack.
- If the "Control Box" isn’t connected, both tests have to be performed through the controlling alarm system.

☞ If a fog ejection test is performed, you’ll have to warn all persons in the immediate surroundings and the responsible person for fire hazard. Make sure no one is looking at the direction of the ejection mouth. Also read next page First Aid.

- Vacuum the textile of the ***BANDIT*** front. The textile also has a function as an air filter for internal air circulation. After a while dust can be an obstacle for a good internal air ventilation. In those rooms which contain a higher dust percentage, a more frequent textile cleaning is advised.

Every 2-years:

- Replace the internal battery in the unit (2Ah / 12V sealed lead/acid).

The ejected fog is completely harmless for human beings and warm-blooded animals (altrough it is harmful for flying insects), even when staying more than 10 minutes in a completely sealed area (< 1 ml *HY-3* aerosol / m³ air).

The only problem to be considered arise from the power of the fog expulsion and possible panic reaction to this sudden event.

However, following persons should avoid staying in those spaces filled with fog:
- persons suffering from claustrophobia (panic instantly)
- persons who are over sensitive to stressing situations, e.g. hyperventilate, racing pulse, etc....
- persons who are strong asthmatic or exceptionally sensitive to irritation of the respiratory system.
- children beneath the age of 9 (possible traumatic experience)

Although harmless, experience tells us, dogs (even trained guard dogs) refuse to enter a room filled with fog.

If requested, your ***BANDIT***-dealer can always provide you with a copy of the *HY-3* MSDS (Material Safety Data Sheet) and/or the approval test of the Belgian Ministry of Health Affairs and/or the German TÜV report. You can always surf to our web site, www.bandit.be, select documents and load the needed files as printable PDF files.

EXAMPLES OF APPLICATION

Diagram 1: Alarm system with npn- outputs, technical input and *BANDIT*-controlled internal siren 12V / max. 250 mA

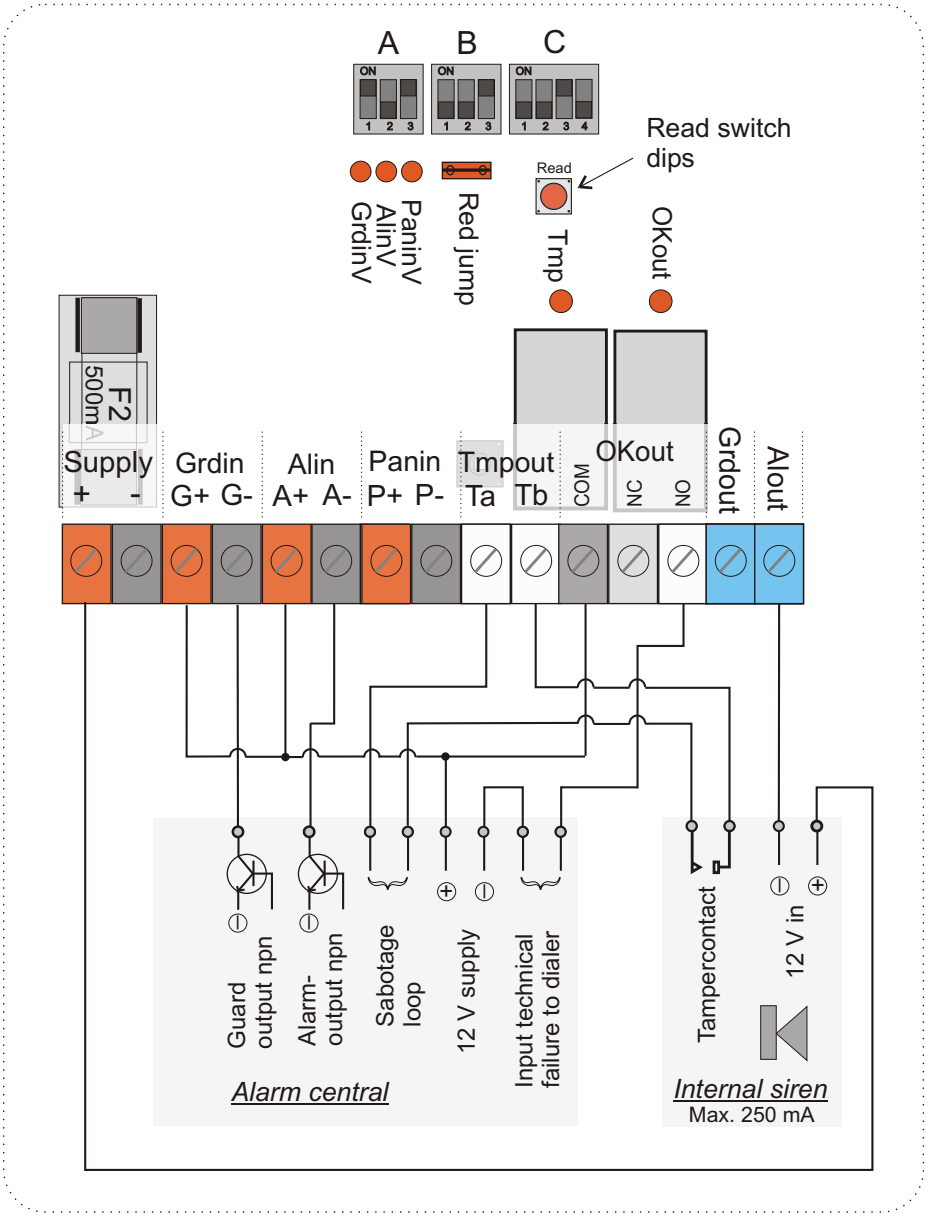

Dip switches:

A1: position ON = unit is only in guard if there is 12V over [Grdin]. So if relevant output of alarm system active (npn-transistor in conduction), the GrdinV LED is lit and ***BANDIT*** is in guard-mode.

A2: position OFF = if there is a transition from 12V to 0 V over [Alin] while ***BANDIT*** is in guard, the alarm mode is activated. This means: fog ejection during adjusted time period (dip block C), and sounding of connected internal siren for max 3 minutes.

A3: position ON = only 12V over [Panin] can activate panic mode, but because this input isn't connected, panic mode is not possible.

B1: No remote control is connected, so no function.
B2: No remote control is connected, so no function.
B3: No Control box connected, so position ON.

C1 OFF, **C2** OFF, **C3** ON and **C4** OFF = adjusted fog ejection period is 4 seconds (see p. 25).

The technical failure input of the alarm system receives12V as long as there is no ***BANDIT*** failure.

Diagram 2: Alarm system with npn-outputs, technical input and additional confirmation sensor.

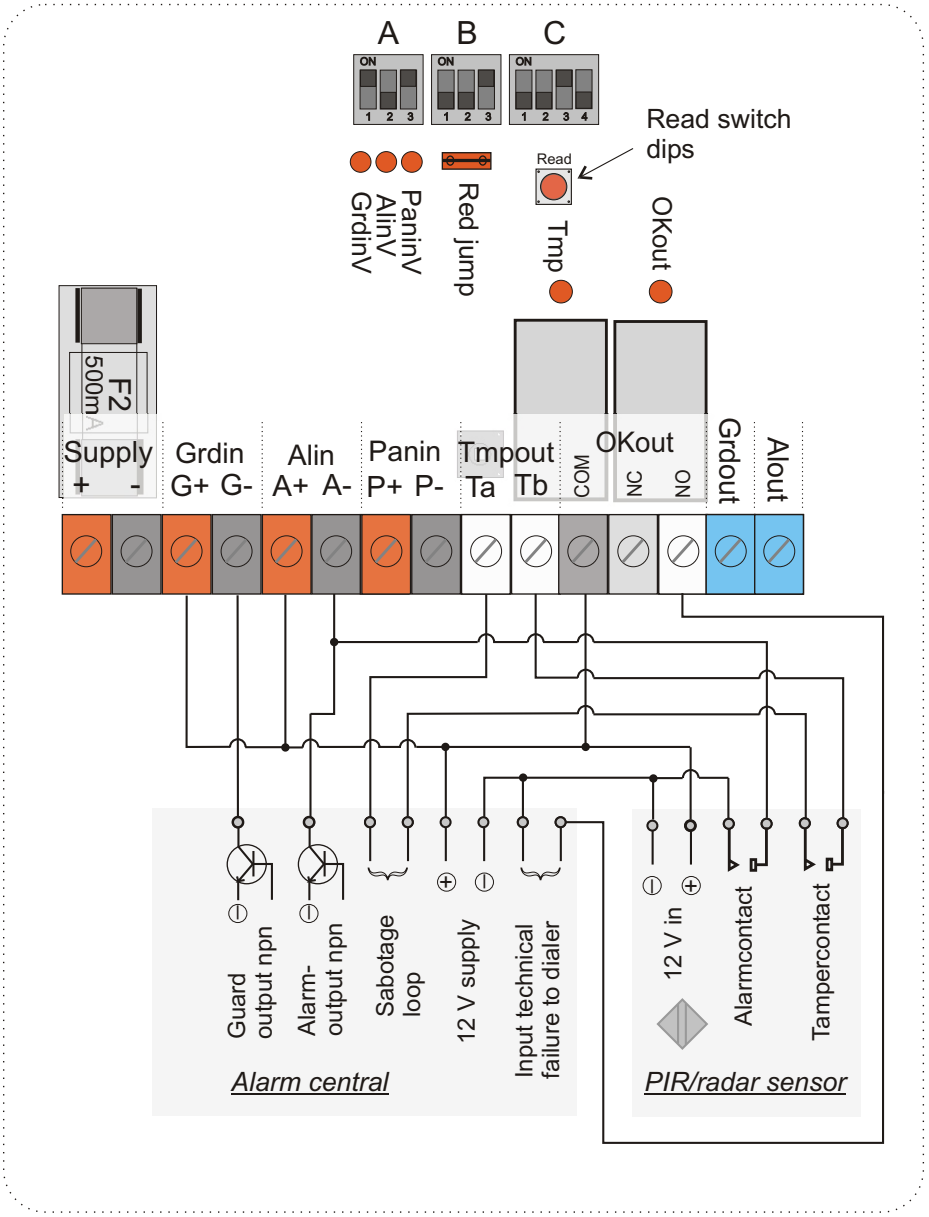

This connection is identical to the previous diagram 1 with the exception that there is connected an additional sensor. Only if the transistor of the alarm system is off (not conducting) **and** the confirmation sensor is being activated (its alarm contact opens) there will be 0 volts over [Alin]. Dip A2 position OFF, so if ***BANDIT*** is in guard, alarm mode is activated. This means fog ejection during adjusted period (dip block C).

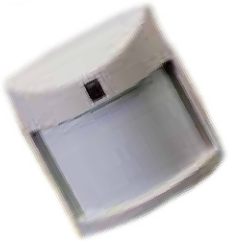

Why to use a confirmation sensor:

- To postpone the transition to alarm mode until a local zone detector confirms the burglary signal of the alarm system.
  For example: the alarm system is in alarm because of burglary detection through back door. ***BANDIT*** will go into its alarm mode the moment the burglar enters the protected zone e.g. “private office”, because the local Connected PIR/radar detector will then open its contacts and the bridging of the alarm system signal is removed.
- A fire detector in the secured area can have the same bridging function, if it’s a type with NC contacts (no fire = contacts closed), serial connection of contacts. So as long as fire is detected, ***BANDIT*** can’t switch to its alarm mode.
  If possible: install temperature sensitive fire detectors, because these are difficult to mislead from a distance and don’t react to ejected fog. Install them against the ceiling, where a burglar has no possibility to reach them before being detected through a burglar detection.

Diagram 3: Alarm system with relay outputs and external dialer to report a technical failure and alarm.

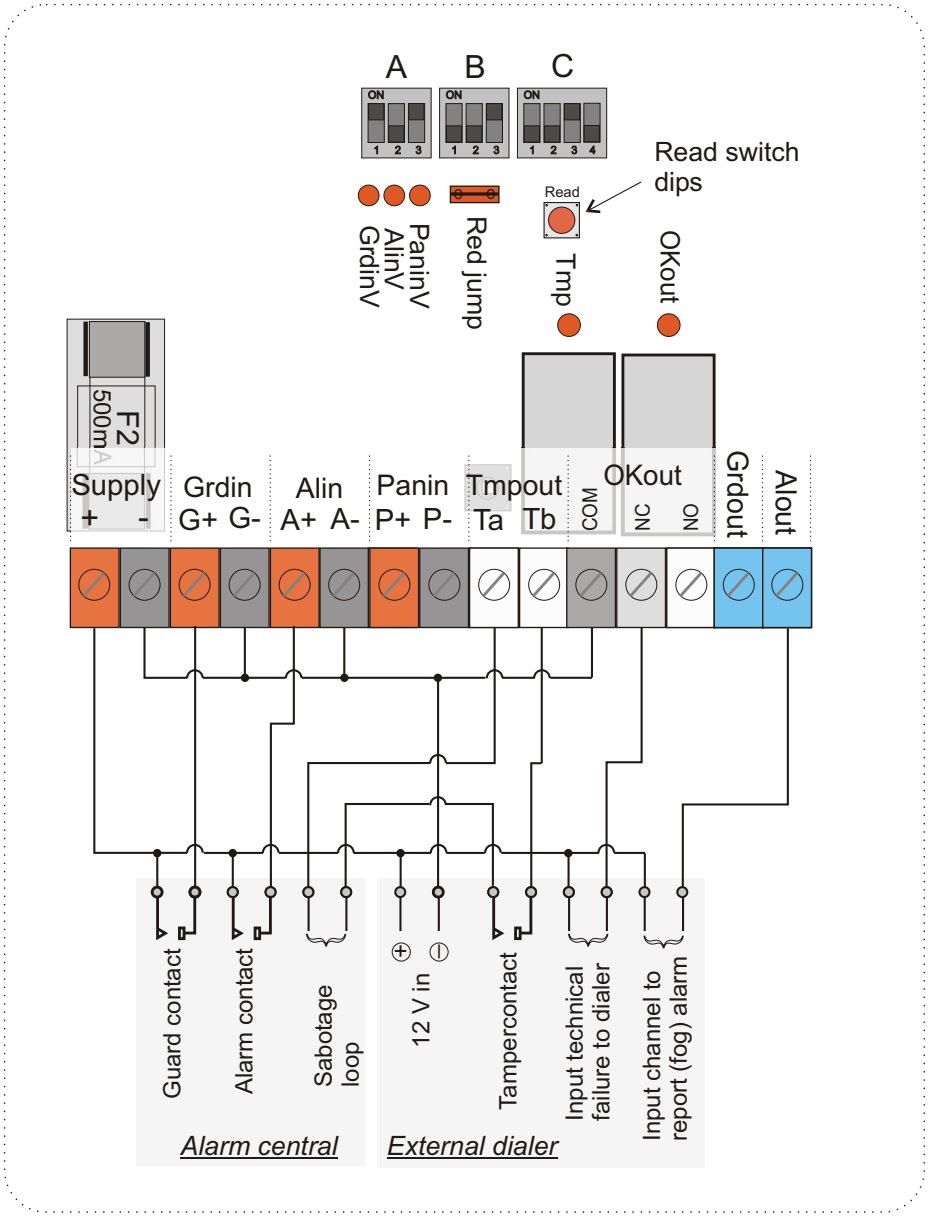

Dip switches:

A1: Position ON = unit in guard only if there is 12V over [Grdin]. So if relevant output of the central is active(relay-contact closed), GrdinV LED is lit and ***BANDIT*** is in guard mode.

A2: Position OFF = if there is a transition of 12V to 0 V over [Alin] (contact opens) while ***BANDIT*** is in guard, the alarm mode is activated. This means fog ejection during adjusted period (dip block C). [Alout] becomes [Supply-]. for 3 minutes. During these 3 minutes, the input for alarm report of the dialer gets 12 V and is activated for this period.

A3: Position ON = only 12V over [Panin] can activate panic mode. Not connected, so no function.

B1: No connection of remote control, so no function.
B2: No connection of remote control, so no function.
B3: No Control box connected, so position ON.

C1 OFF, **C2** OFF, **C3** ON and **C4** OFF = adjusted fog ejection period is 4 seconds (see p. 25).

The technical failure input of the dialer gets 12V as long as there is a ***BANDIT*** failure through the NC contact of [Okout].

FREQUENTLY ASKED QUESTIONS

? Is the fog harmful to our health or can it cause damage to computers, photo equipment, food, etc.?

No, fog ejected by ***BANDIT*** is almost the same as used in the entertainment industry, only much thicker and faster produced. Only when too much fog is ejected into a limi space (overfilling), or the space has no ventilation (no air movement) so the fog stays steady for more than 20 minutes, a harmless thin condensation film may appear on certain surfaces (cold and smooth ones). If accidentally this does happen, this can be easily removed using a moist cloth (the condensation is water-soluble) without using any soap.
You can always get a copy of following documents from your ***BANDIT***-dealer:
- HY-3 safety data sheet (MSDS).
- HY-3 approval form from the Belgian Ministry of Health Affairs.
- German TÜV approval form for HY-3.

? Who is responsible if someone gets injured due to low visibility caused by a fog ejection?

Regarding this subject there is no precedent or legal experience defined, because up to now there have been no accidents with the ***BANDIT*** security system. In any case, the manufacturer has covered himself with an insurance for accidents caused by his product, regarding the third person liability, the burglar himself and/or the damage caused by public services (police, fire, etc...) Also look at our sales conditions (www.bandit.be)
Keep in mind that the manufacturer is not responsible for goods that are stolen even though ***BANDIT*** is functioning as supposed or if it is malfunctioning due to an internal or external failure. We advise the installer to inform his insurance company that they will be installing fog security systems. The insurance will accept that this falls under your normal professional coverage as an alarm installer. The insurance company can always request a copy of the ***BANDIT*** “no claim" certificate from the manufacturer’s insurance company.

? I have to install a ***BANDIT*** system and the local person responsible for security demands that the unit doesn’t eject fog in case of fire.

Install an approved heat sensitive fire sensor on the ceiling. This type of sensor will not react to ejected fog, but opens its alarm contact at the moment a rapid increase of temperature occurs.
Connect this fire sensor alarm contact to a programmable input and define this input as fog expulsion preventing fire sensor input. The procedure which is followed when activating this input depends on the possibility of the controlling alarm system.
Always, install the fire sensor where a possible burglar can’t reach without first being detected by the burglar alarm system.

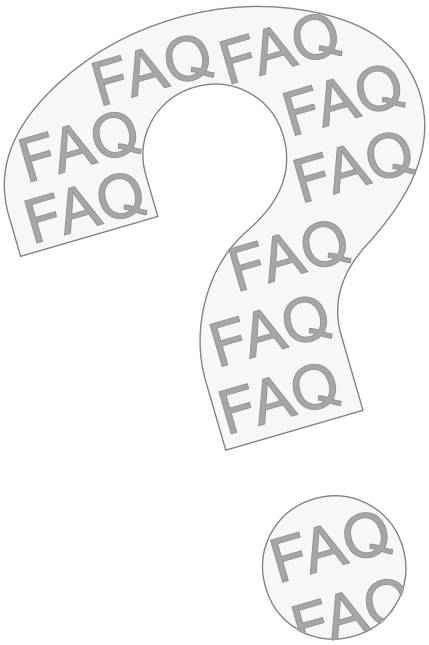

? Do I have to replace the *HY-3 pack* (liquid supply) each time the unit has performed a fog expulsion, including false alarms?

No, ***BANDIT*** consumes ~28 ml. of HY-3 fluid each second of fog expulsion. A fully charged reservoir contains ~1400 ml.of HY-3 fluid. The unit can perform ~ 50 seconds of fog expulsion. Depending on the adjusted fog expulsion period each alarm cycle leaves, a minimum of 3 (big spaces, 200 M² with normal ceiling height of 2,80 metre) to a maximum of 25 expulsion cycles in reserve. If the liquid level is beneath the adjusted minimum level, the unit will request to replace the *HY-3* pack. See page 22 for further explanation.

? What does replacing of the *HY-3 pack* mean?.

The *HY3-pack* is an ingenious combination of different parts:
- A pressure vessel: 2 pressure resistant stainless steel tubes. These contain the *HY-3* liquid and the propellant under pressure, equal to the vapour pressure of the liquid pressure gas and the nitrogen after pressure filling. Both gasses are not inflammable, are ozone friendly and are not poisonous for humans or the environment.
- The electro valve: together with the liquid filter it forms an integral subpart of the HY-3 pack. If the valve is opened by the ***BANDIT***-electronics, the *HY-3* liquid goes through the *HY-3 pack* ‘s liquid link in the hot heat exchanger for heating up and drying.
- The electronics: built-in to the *HY-3 pack*. This little PCB contains a voltage regulator, temperature- and memory chip and a few components which take care of the communication with ***BANDIT*** main PCB. The purpose of these electronics is to “measure” how much fluid is present in the pressure vessel and to store all production and filling data of the *HY-3 pack*.

If the pressure vessel is empty, you’ll have to replace it with a refilled one. The pressure vessel has to be returned for refilling. There, the still present fluid and propellant will be sucked out and recycled. The empty *HY-3 pack* will be automatically tested and refilled. The built-in memory chip will be updated and the “renewed” *HY-3 pack* is carefully re-packed to be sent to the customer.
This way, environment taxes and material costs are minimised. The high certainty of returning the empty *HY-3 packs* for refilling is secured through the high purchase price for a new *HY-3 pack*.

? Does the *HY-3* fluid in the *HY-3* pack expire (decay) or does it loose its fog generating capacity after a certain period?

Contrary to those fog generators which hold their supply of fog fluid in a synthetic reservoir, the *HY-3* fluid in the *HY-3 pack* is kept in an oxygen free, pressure environment, Ph stabilised, de-ionised, clean filled and hermetically sealed off from the outside world. Degeneration in the *HY-3* pack is thereby eliminated.