RISCO
A LIFETIME OF SECURITY

# LightSYS Air

## User Manual

For more information about RISCO Group's branches, distributors and full product line, please visit **riscogroup.com**

## Important Notice

This document is delivered subject to the following conditions and restrictions:

This document contains proprietary information belonging to RISCO Group. Such information is supplied solely for the purpose of assisting explicitly and properly authorized users of the system. No part of its contents may be used for any other purpose, disclosed to any person or firm, or reproduced by any means, electronic or mechanical, without the express prior written permission of RISCO Group.

The information contained herein is for the purpose of illustration and reference only.

Information in this document is subject to change without notice. Corporate and individual names and data used in examples herein belong to their respective owners.

## Copyright Information

RISCO Group 2023. All rights reserved. No part of this document may be reproduced in any form without prior written permission from the publisher.

# Contents

**LIGHTSYS AIR MAIN FEATURES** ..... **1**

FLEXIBLE, SCALABLE, SYSTEM ..... 1
ADVANCED FEATURES FOR SYSTEM USERS ..... 1
EMPOWERED BY THE RISCO CLOUD ..... 3
*Self-Monitoring, Operation and Notification via the RISCO Cloud* ..... *3*
iRISCO Smartphone App ..... 3
Web User Interface ..... 3
MONITORING STATION PARTNERSHIP ..... 6
OPERATIONAL DEVICES & INTERFACES FOR SYSTEM USERS ..... 6

**IMPORTANT SAFETY PRECAUTIONS** ..... **8**

**GETTING STARTED** ..... **8**

**INITIAL SETUP TASKS FOR THE GRAND MASTER** ..... **9**

WHO CAN / CAN'T PERFORM THE PROCEDURES? ..... 9
STEP 1: CHANGING THE DEFAULT GRAND MASTER CODE ..... 10
STEP 2: REGISTERING THE SYSTEM TO THE RISCO CLOUD ..... 10
*Viewing the Panel ID at the Keypad* ..... *11*
STEP 3: LOGGING INTO THE RISCO CLOUD / WEB USER INTERFACE ..... 11
STEP 4: DOWNLOADING THE IRISCO SMARTPHONE APP ..... 11
*Logging into the iRISCO App* ..... *11*
STEP 5: WORKING WITH KEYPADS AND USER MENUS ..... 12
*Keypad Buttons* ..... *12*
*User Menus* ..... *13*
Accessing User Menus – Upon First System Start-Up ..... 13
Exiting User Menus ..... 14
STEP 6: DEFINING USER CODES AND PROXIMITY TAGS ..... 14
*Describing User Authority Levels* ..... *14*
Table of User Authority Levels ..... 14
*Describing User Codes* ..... *16*
Creating or Editing User Codes ..... 17
Creating or Editing the Duress-Disarming Code ..... 17
Creating or Editing Labels ..... 19
Deleting Codes ..... 19
*Describing Proximity Tags* ..... *20*
Defining and Enrolling Proximity Tags ..... 21
Enrolling My Own Proximity Tag ..... 21
Deleting Proximity Tags ..... 22
Deleting a Proximity Tag by its Index Number ..... 22
Deleting a Proximity Tags by its Tag ..... 23

Deleting My Own Proximity Tag ..... 23
STEP 7: DEFINING FOLLOW-ME DESTINATIONS ..... 24
*Examples of Follow-Me Notifications ..... 24*
*Creating or Editing Follow Me Destinations ..... 25*
*Deleting Follow Me Destinations ..... 25*
*Testing Follow-Me Destinations ..... 26*
*Keyfob Button for Output Control ..... 26*
STEP 8: PERFORMING A MONITORING STATION TEST ..... 26
STEP 9: PERFORMING A WI-FI SCAN ..... 27
STEP 10: TRAINING SYSTEM USERS ..... 27

**OPERATING THE SYSTEM ..... 28**

MODES OF OPERATION ..... 28
*Remote Operational Modes ..... 28*
*Local Operational Modes ..... 28*
OPERATING REMOTELY BY SMS ..... 29
*SMS Commands ..... 29*
OPERATING LOCALLY BY KEYPADS, REMOTE CONTROLS/KEYFOBS, AND PROXIMITY ..... 30
*Working with Keypads ..... 30*
Keypad Display Options ..... 30
Using the "Multi View" Keypad Display ..... 30
Using the "Blank" Keypad Display ..... 31
OBTAINING SYSTEM INFORMATION ..... 31
*Obtaining System Status – Requested from Remote Controls ..... 32*
*Obtaining System Status – Requested from Keypads ..... 32*
*Obtaining System Information – Requested from, and Viewed at Keypads ..... 33*
Viewing the Event Log ..... 33
Viewing System Troubles ..... 34
Viewing Alarm Memory ..... 34
Viewing Partition Status ..... 34
Viewing Zone Status ..... 35
Viewing Service Information ..... 35
Installer Information ..... 35
System Version ..... 35
Serial Number ..... 36
Panel ID ..... 36
Viewing IP Address ..... 36
Cloud Status ..... 37
Wi-Fi Status ..... 37
BYPASSING ZONES ..... 38
*Viewing Not-Ready Zones ..... 38*
*Defining Zone Bypass Status ..... 39*
*Quickly Bypassing/Un-Bypassing Zones on a One-Time Basis ..... 40*
ARMING & DISARMING THE SYSTEM ..... 41

*Arming/Disarming Modes* ..... *41*
*Before Arming the System* ..... *41*
*Arming Procedures* ..... *42*
Full ("Away") Arming ..... 42
Partial ("Stay" or "Home") Arming ..... 43
Partition Arming ..... 45
Arming All Partitions ..... 46
Arming an Individual Partition ..... 47
Group Arming ..... 48
Automatic Arming and Disarming ..... 50
Arming with System Troubles ..... 50
Forced Arming (Arming with Automatically-Bypassed Zones) ..... 50
Bypassing Zones (Arming with Manually-Bypassed Zones) ..... 51
Keyswitch Arming ..... 51
Forced Keyswitch or Proximity Arming ..... 51
Low-Battery Arming ..... 51
Strobe Arming ..... 51
*Disarming Procedures* ..... *51*
Disarming All Partitions ..... 52
Disarming an Individual Partition ..... 52
Duress Disarming ..... 53
Disarming with Alarm Activation (Silencing an Alarm) ..... 53
RETURNING THE SYSTEM TO NORMAL OPERATION AFTER ALARM ACTIVATION ..... 54
*Resetting the System with Installer/Technician Intervention* ..... *55*
Anti-Code Reset (Technician Reset) ..... 55
Configuration Software Reset ..... 55
Enabling Technician/Installer CS Access for Resetting the System ..... 55
*Disabling Smoke/Heat Detectors after Alarm Activation* ..... *56*
ACTIVATING EMERGENCY ALARMS ..... 57
*Activating a Panic ("Police") Alarm* ..... *57*
*Activating a Fire Alarm* ..... *57*
*Activating an Auxiliary ("Emergency") Alarm* ..... *58*
*Activating a Duress-Disarming Alarm* ..... *58*
DESCRIBING UTILITY OUTPUTS ..... 59
*UO Operational Modes* ..... *59*
MANUALLY OPERATING UTILITY OUTPUTS ..... 60
DEFINING AUTOMATICALLY-OPERATED UOS AND ARMING OPERATIONS ..... 61
*Defining a "One-Time" Schedule for Automatic Arming* ..... *61*
*Defining Weekly Schedules for Automatic Arming and UOs* ..... *62*
Configuring the Arm/Disarm Option ..... 62
Turning an Arming/Disarming Schedule On or Off ..... 62
Defining Partitions for the Arming/Disarming Schedule ..... 62
Selecting an Arming Mode for the Arming/Disarming Schedule ..... 63
Setting the Day & Time for the Arming/Disarming Schedule ..... 63
Defining a Label for the Arming/Disarming Schedule ..... 63

Turning the Inactivity Timer On or Off for the Arming/Disarming Schedule ..... 63
Configuring the UO Option ..... 64
Turning a UO Schedule On or Off ..... 64
Defining the Utility Output(s) for the Schedule ..... 64
Setting the Day and Time for the UO Schedule ..... 64
Defining a UO Schedule as a "Vacation" UO Schedule ..... 64
Defining a Label for the UO Schedule ..... 64
Configuring the User Limitation Option ..... 65
Applying/Removing a User Limitation ..... 65
*Describing Vacation Schedules* ..... *65*
Setting Dates/Times and Activating a Vacation Schedule ..... 66
Defining Partitions for an Arming Vacation Schedule ..... 66
USING MACROS ..... 67
*Recording Macros* ..... *67*
*Activating Macros* ..... *67*
PERFORMING MAINTENANCE TASKS ..... 68
*Defining the Time and Date Manually* ..... *68*
*Replacing Detector & Accessory Batteries in Service Mode* ..... *68*
*Performing SIM Card Maintenance* ..... *69*
Checking the SIM Credit Level ..... 69
Resetting the SIM Card ..... 69
*Enabling / Disabling Keypad Sounds* ..... *69*
Enabling / Disabling the Current Keypad's Chime ..... 70
Enabling / Disabling All Keypad Chimes ..... 70
Enabling / Disabling the Current Keypad's Buzzer ..... 70
*Terminating Follow-Me Notifications* ..... *71*
*Cancelling Monitoring Station Notification upon Installer Programming* ..... *71*
TESTING THE SYSTEM ..... 71
*Performing a Walk Test* ..... *72*
*Testing MS Communication* ..... *72*
*Testing Follow-Me Destinations* ..... *73*
*Performing a Keypad Test* ..... *73*
*Performing a Siren Test* ..... *73*
*Performing a Strobe Test* ..... *74*

**APPENDIX A: SCHEDULING CHART FOR AUTOMATIC UO & ARMING OPERATIONS ..... 75**

**APPENDIX B: USER MENU MAPS ..... 76**

**APPENDIX C: SYSTEM INDICATORS ..... 77**

SOUND INDICATORS ..... 77
*"Beep" and "Squawk" Sound Indicators* ..... *77*
VIEWED INDICATORS ..... 79
*Keypad Indicators* ..... *79*
Slim Keypad Indicators ..... 79

Panda Keypad Indicators ..... 80
*Remote Control Indicators ..... 80*
4-Button Panda Keyfob Indicators ..... 80

# LightSYS Air Main Features

## Flexible, Scalable, System

The ideal security solution for commercial sectors, LightSYS Air offers communication flexibility and advanced system control and operation for small and large installations using state-of-the-art RISCO detectors and accessories – including remote user operation via Smartphone and Web user apps.

A flexible system that is scalable according to your needs, LightSYS Air empowers you to utilize up to 128 zones and 128 system users.

LightSYS Air utilizes a wide range of RISCO peripherals in almost any combination – as well as a multitude of other security and safety accessories.

## Advanced Features for System Users

- ✓ **Live video verification** using RISCO's revolutionary Cloud-enabled VUpoint P2P cameras – for real-time verification of alarms and events, as well as live video on demand
- ✓ **User monitoring & event notification** via the Cloud-based iRISCO Smartphone app and the Web User Interface
- ✓ **Follow-Me reporting** for sending event notifications up to 64 recipients — via SMS or e-mail
- ✓ **Event logging** of up to 2000 system events, including alarms, arming/disarming, bypassing, troubles, restores, and resets. View events on keypads, via the iRISCO Smartphone app, and with RISCO's Web user interface.
- ✓ **Scheduling automatically-operated operations** for arming and activation of external devices and appliances via utility outputs – for a one-time occurrence, on a reoccurring weekly basis, or for vacations

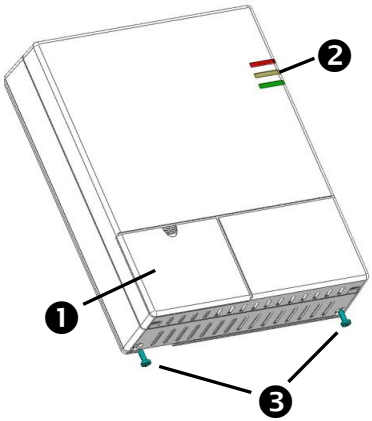


| | |
|---|---|
| ❶ | Front access cover |
| ❷ | LED indicators |
| ❸ | Locking-screws (2) |

| Main Panel Indication LEDs | | | |
|---|---|---|---|
| | **Color** | **State** | **Status** |
| Power LED | Green | ON | Power OK |
| | Red | ON | AC trouble |
| | Orange | ON | Battery trouble. |
| Status LED | Red | ON | System armed (Away or Stay) |
| | | Rapid flash | Alarm |
| | | Slow flash | System is in exit delay |
| | Green | ON | System ready |
| | | Slow flash | System in Exit/Entry delay with front door open |
| | | Off | System not ready for arming |
| | Orange | ON | System Trouble |
| Communication LED | Green | ON | Cloud connected |
| | | Slow flash | GSM/IP OK |
| | Orange | Slow flash | GSM/IP Trouble |
| All LEDs | Green | Sequence flash | Wireless Learn mode |
| All LEDs | Orange | Slow flash | Battery Replacement mode (service mode) |
| All LEDs | Green | Slow flash | System in installation Mode/System in upgrade mode |
| All LEDs | Green → Red | Slow flash | Access Point Mode |
| All LEDs | Green | Rapid flash | Accessories Upgrade Mode |

# Empowered by the RISCO Cloud

Cloud communication is available either from the RISCO Cloud – RISCO's application server, or from a privately-hosted server.

## Self-Monitoring, Operation and Notification via the RISCO Cloud

Powered by the RISCO Cloud, the iRISCO Smartphone app and Web User Interface empower system users with self-monitoring, notification, control, and operation of their systems remotely - anywhere, anytime, with or without a monitoring station. The RISCO Cloud also enables operating RISCO's Home Automation services.

### iRISCO Smartphone App

The iRISCO Smartphone app provides smart and easy control of the system, enabling on-the-go users to receive event notifications, view the system's status and event history, arm/disarm the system, activate home automation devices, bypass zones, and utilize IP cameras for real-time, live visual verification and self-monitoring. iRISCO is downloadable from the Apple App Store for iOS devices and from the Play Store for Android devices.

### Web User Interface

RISCO's Web User Interface enables system users to monitor, control and operate their system via their computer's Web browser. In addition to the capabilities of the iRISCO Smartphone app, the Web User Interface enables registering the system, adding system users, and more.

| Capabilities | Description |
|---|---|
| Communication modes (modules) | GPRS/GSM (2G), GSM (4G), IP/WI-FI |
| Wireless zones | 128 |
| Wireless frequencies | 868.65 MHz, 433.92 MHz |
| Camera frequency | 869.525 MHz, 916 MHz |
| Power Output | • Security 868.65 MHz, 10 mW<br>• Camera 869.525 MHz, 100 mW |
| System users (user codes) | 128 (includes 1 installer, 1 sub-installer, and 1 Grand Master code) |
| Follow-Me destinations | 64 |
| Panel programming options | Keypad (locally)<br>Configuration Software (locally, remotely)<br>iRISCO App |
| Partitions | 32 |
| Monitoring station accounts | 3 |
| Event log | 2000 entries |
| PIR cameras | 32 |

| Capabilities | Description |
|---|---|
| Sounders (internal/external) | 3 |
| Keypads | 8 |
| Keyfobs / remote controls | 128 |
| SMS for remote operation | yes |
| WL Repeater | 4 |
| Programmable utility outputs (UO) | Supports up to 4 programmable utility outputs (UOs) |

## Compliance Statement

Hereby, RISCO Group declares that the LightSYS Air is designed to comply with:

- EN50131-1
- EN50131-3 Grade 2, Environmental Class II
- EN50131-6 Type A
- EN50136-1
- EN50136-2
- EN50131-10 SPT Type Z
- PD6662:2017
- Compatibility with serial interface with AS
- Compatibility with GPRS protocol
- Compatibility with TCP/IP protocol
- Control Panel method of operation: Pass-through
- Signaling security: Substitution security S2
- Information security I3

**Alarm Transmission System Classification and Categories:**

- GSM 2G/4G (SP5)
- IP/Wi-Fi (SP6)
- GSM primary and IP/ Wi-Fi secondary (DP4),
- IP/ Wi-Fi primary and GSM secondary (DP4)

**EN50136 Compliance:**

• RISCO has designed the LightSYS Air IP and GSM communication modules to be in compliance with the information security and substitution security requirements of EN50136.

## Monitoring Station Partnership

For extra security monitoring, LightSYS Air can be used with up to 2 separate monitoring stations. When a system event such as an alarm takes place, the monitoring station is automatically notified. This helps enable rapid around-the-clock resolution in notifying responding agencies (police, fire, medical, etc.) for resolution of a false alarm, or in resetting the system, for example.

The system installer configures the monitoring station account(s) to be notified for the specific event types and partitions selected.

## Operational Devices & Interfaces for System Users

| Device/interface | Description & model numbers |
|---|---|
| | **Panda Wireless:**<br>RW432KPP2 |
| | **2-Way Wireless Slim Keypad:**<br>RW132KL1P (Outdoor, black)<br>RW132KL1P (Outdoor, black, with Proximity) |

| Device/interface | Description & model numbers |
|---|---|
| | **Panda 2-Way KeyFob:**<br>RW332KF1 |
| | **Web User Interface** |
| | **iRISCO app for Smartphones (both iOS and Android)** |
| | **SMS notifications (for mobile phones)** |

# Important Safety Precautions

⚠ **WARNING:** Usage of this product that is not in accordance with the intended use and manufacturer instructions can result in damage, injury or death.

⚠ **WARNING:** Make sure this product is not accessible by those for whom operation of the system is not intended, such as children.

⚠ **WARNING:** Do not open the main panel nor service this product yourself. Always call a professional alarm system installer for servicing and repair.

⚠ **WARNING:** The main panel should be connected to an easily-accessible wall outlet so that electrical power can be disconnected immediately in case of malfunction or hazard. If it is permanently connected to an electrical power supply, then the connection should include an easily-accessible disconnection device, such as a circuit breaker.

⚠ **WARNING:** Replace only detector and accessory batteries as needed, and with the correct type to avoid the risk of explosion. Do not replace the main panel backup battery – call a professional alarm system installer.

⚠ **WARNING:** Dispose of batteries according to applicable law and regulation.

# Getting Started

This manual describes how to setup and operate your LightSYS Air system, and contains the following main sections:

- **Initial Setup Tasks for the Grand Master:** The required, initial system setup tasks that are typically performed by the Grand Master – the principal system user
- **Operating the System:** The user operations, such as arming, disarming, and bypassing zones -- which may vary per user
- **Reference Materials (Appendixes)**

# Initial Setup Tasks for the Grand Master

Before operating the system, the Grand Master (chief system user) must perform some initial setup tasks. Below is a list of the Grand Master tasks most commonly performed, shown in a typical order (depending on the system requirements, not all of these tasks may be necessary):

Step 1: Changing the Default Grand Master Code

Step 2: Registering the System to the RISCO Cloud

Step 3: Logging into the RISCO Cloud / Web User Interface

Step 4: Downloading the iRISCO Smartphone App

Step 5: Working with Keypads and User Menus

Step 6: Defining User Codes and Proximity Tags

Step 7: Defining Follow-Me Destinations

Step 8: Performing a Monitoring Station Test

Step 9: Performing a Wi-Fi Scan

Step 10: Training System Users

## Who Can / Can't Perform the Procedures?

Although this chapter is intended for the Grand Master, some of the procedures can also be performed by the installer and other system users – whether at initial setup, or during regular system operation.

In order to show at-a-glance who can/can't perform the procedure, at the start of each procedure the two most common user authority levels (level of permissions) are indicated – **Grand Master** and **User,** as well as the **Installer/Technician.** Their respective icons are as follows, and if an icon is not listed, it means that person does not have permission to perform the procedure:

- **Grand Master:**
- **User:**
- **Installer/Technician:**

**NOTE:** For installer/technician-indicated procedures, although they can perform the procedures (locally at the premises or remotely via Configuration Software), the procedures in this manual are specifically for Grand Master and system users.

For a detailed description of all user authority levels and their respective permissions, see *Describing User Authority Levels, page 14*.

# Step 1: Changing the Default Grand Master Code

**IMPORTANT:** The default Grand Master code is **1234,** which can be changed by both the installer and Grand Master. After the installer is finished installing and programming the system, it is recommended that the Grand Master change this code to be one that is unique, and confidential.

# Step 2: Registering the System to the RISCO Cloud

Registering to the RISCO Cloud is a one-time procedure that allows you to use the iRISCO Smartphone app and Web User Interface. This procedure should be performed by the system installer, after you supply the installer with the required information, such as an e-mail address.

➢ **To register the system to the RISCO Cloud:**

1. After the RISCO Cloud has been installer-enabled during system configuration, go to **www.riscocloud.com**

   **NOTE:** The Installer can change the Grand Master Code but cannot see the one programmed.

2. Fill in your first name and last name.
3. Enter your e-mail address as the Login Name (required for 1st-time activation).
4. Define the password (must be: a minimum of eight characters; contain at least one capital letter and one lower case letter; contain at least one number; and contain at least one special symbol) and then confirm.
5. Enter the 15-digit panel ID as it appears on the postcard packaged with the panel or supplied by the installer. You can also view it on the keypad (see the procedure below).
6. Complete registration form, and then press **Register.**
7. Open the e-mail received at the email account you had defined as the Login Name in step 3, and then click the link to activate your registration to the Cloud.

➢ **To register to the iRISCO Smartphone App:**

Download the iRISCO Smartphone app from the Apple App store or the Android Play Store.

## Viewing the Panel ID at the Keypad

➢ **To view the main panel ID at the keypad:**

1. Enter your Grand Master or user code, and then press **OK.**
2. Scroll to the **View menu** and then press **OK.**
3. Scroll **Service Info** and then press **OK.**
4. Scroll to **Panel ID** and then press **OK;** the 15 digit panel ID displays.

# Step 3: Logging into the RISCO Cloud / Web User Interface

You must log into the RISCO Cloud after registration. In addition, the Grand Master and other system users (according to user authority level) can access and use the Web User Interface, which offers basic and advanced remote operation, control, and management operations for the system. Each time you log in to the Web User Interface, you connect to the RISCO Cloud.

➢ **To log into the RISCO Cloud / Web User Interface:**

1. Go to **www.riscocloud.com**
2. Enter your **user name** and **password** (as you defined during the registration process – see *Step 2: Registering the System to the RISCO Cloud, page 10*).
3. Enter the system **PIN code** (user code), and then click **Enter.**

# Step 4: Downloading the iRISCO Smartphone App

For system users with Smartphones, the iRISCO Smartphone app can be downloaded from the Apple App store for iOS devices and from the Play Store for Android devices.

## Logging into the iRISCO App

Whenever you access the iRISCO app, you typically need to enter your PIN only. However, if you manually log out from iRISCO, then to subsequently access it, you must first log into the RISCO Cloud (at the iRISCO Login screen).

# Step 5: Working with Keypads and User Menus

## Keypad Buttons

Familiarize yourself with the keypad buttons for Grand Master setup tasks as well as the buttons used for the operational procedures performed by system users. Also see the packaged keypad instructions and the respective procedures in this manual.

This describes the main functions of keypad buttons for both Grand Master setup tasks and the operational commands available for all system users. For further details, see the packaged keypad instructions and also the respective procedures in this manual.

| Panda Keypad | Slim Keypad | For Grand Master Setup | For User Operations |
|---|---|---|---|
| **Buttons 0—9** | **Buttons 0—9** | For entering numeric data/values, for use as quick keys | For user operations and commands |
| | — — | **EXIT:** Exit a menu, back a step, or return to beginning of a menu | **EXIT:** Exit a menu, back a step, or return to beginning of a menu |
| | — — | **BYPASS:** Bypass zones | **BYPASS:** Bypass zones |
| OK | # ? | **OK:** Ok / confirm / save | **OK:** Ok / confirm / save<br>**STATUS:** For Slim only, also status via its LEDs |
| | — — | **SCROLL:** Scroll through menus & options, also for toggling (such as between ON/OFF) | **SCROLL:** Scroll through menus & options, also for toggling (such as between ON/OFF).<br>**STATUS:** view partition status before arming. |
| | — — | **SCROLL:** Scroll or toggle backward | **PARTITION STATUS:** Displays the status of the partition to which the keypad is assigned |
| | | **TOGGLE:** To toggle between options (not applicable for Slim) | **PARTIAL ARM:** For partial (home/stay) arming |
| | | **TOGGLE:** To toggle between options (not applicable for Slim) | **FULL ARM:** For full (away) arming |
| OK | | — — | **DISARM:** For disarming the system |
| **Buttons 4 and 6** | **Buttons 3 and 4** | — — | **FIRE ALARM:** To activate a fire alarm |
| **Buttons 7 and 9** | **Buttons 5 and 6** | — — | **EMERGENCY:** To activate an emergency alarm |

| Panda Keypad | Slim Keypad | For Grand Master Setup | For User Operations |
|---|---|---|---|
| | **Buttons 1 and 2** | — — | **PANIC:** To activate a panic alarm |
| **1 = A**<br>**2 = B**<br>**3 = C**<br>**5 = D** | — — | **GROUP:** To select group/s for group arming | **GROUP:** To select group/s for group arming |

## User Menus

From a keypad, the Grand Master is the one who typically performs the system setup tasks (the tasks geared for system users) from the user menus. Each menu's configurable options display for the devices connected in the system. User menus are as follows:

| | | | | |
|---|---|---|---|---|
| **Activities** | **Follow Me** | **View** | **Codes / Tags** | **Clock** |
| **Event Log** | **Maintenance** | **Macro** | | |

**NOTE:** For a detailed list of all user-programmable settings for all user menus, see *Appendix B: User Menu Maps, page 76*.

## Accessing User Menus – Upon First System Start-Up

➢ **To access User menus upon first system start-up:**

1. After the installer has installed, programmed, and handed over the system, make sure the main panel is powered-up. If you power-up the system yourself, press the **Exit** button (see table in Keypad Buttons, page 12) when prompted to do so and then wait a few seconds.

   **NOTE:** If a partition or tamper alarm goes off (it will sound as well as display), to silence it press the **Exit** button, immediately enter your Grand Master or user code, and then press **OK**; the alarm type, date and time will display. Press **OK** again to view the status. When you have finished viewing the alarm information, press **Exit**, re-enter your code, and then press **OK.**
2. Enter your Grand Master or user code, and then press **OK.**
3. When prompted to "ENTER TIME/DATE" scroll to the respective fields and enter the time and date accordingly. Note that if you wait too long before entering this information, you'll need to press **Exit** and re-enter your code again.
4. Press **OK**; you are now in the **Activities** menu. You can also scroll to other user menus, as needed.

## Exiting User Menus

After you have finished with all the setup tasks, exit from the user menu.

➢ **To exit a user menu:**

- Press the **Exit** button repeatedly (see table in Keypad Buttons, page 12) to exit all menu options and user menus until INSERT CODE appears.

# Step 6: Defining User Codes and Proximity Tags

Before assigning user codes, it is important to understand the available authority levels (permissions levels) that need to be assigned for each system user.

## Describing User Authority Levels

Each user-initiated command or procedure for operating the system requires the system user to have permission to perform it. Various levels of permissions ("user authority levels") are available to assign to each user, which designates which, out of all the system operations, the user can or can't perform. The Grand Master (only one allowed) has the highest level, and is responsible for determining the appropriate user authority level for each other system user, and then communicating it to the installer – who in turn programs it in the system. If the Grand Master ever decides to restrict the permissions or grant additional permissions for a user, the installer may need to re-program the authority level in the system.

### Table of User Authority Levels

This table lists all user authority levels, and describes their respective permissions. The **Grand Master** can perform all of the user operations, while system users with the **User** authority level (the default) can perform most of the common operations.

| Authority level | Description of permissions |
|---|---|
| **Grand Master** | o Can perform all operations for all partitions<br>o Grand Master code can be changed by the Grand Master or installer only<br>o Only 1 Grand Master code allowed in the system (has index number **000)**. |
| **Master** | Can perform all operations like the Grand Master, except the following:<br>o Can only assign and change codes belonging to those with authority levels of Master and below<br>o Restricted access to designated partitions<br>o No restriction on the amount of Master codes |

| Authority level | Description of permissions |
|---|---|
| **User** | ○ Can perform the following for one or more partitions:<br>▪ Arming and disarming<br>▪ Bypassing zones<br>▪ Accessing designated partitions<br>▪ Viewing system status, trouble, and alarm memory<br>▪ Resetting the switched auxiliary output (i.e. for disabling fire alarms)<br>▪ Activating designated utility outputs<br>▪ Changing one's own code<br>○ No restriction on the amount of User codes |
| **Unbypass** | ○ All permissions of User level, except without the ability to bypass zones |
| **Duress** | ○ Duress is not really an authority level but a special programmable code for all system users – used for activating a "Duress-Disarming" alarm. Both the installer and Grand Master have a role in defining the Duress Disarming code (see *Creating or Editing the Duress-Disarming Code, page 17*). |
| **Arm Only** | ○ Can only perform arming (for one or more partitions)<br>○ Useful for workers who arrive when the premises are already open, but are the last to leave, and thus have the responsibility to close the premises and arm the system<br>○ Cannot change one's own code<br>○ No restriction on the amount of Arm Only codes |
| **Maid** | ○ Typically used for cleaners and home attendants who may need to enter the premises at times when the owner is not present<br>○ For one-time arming of one or more partitions<br>○ A temporary code, it is automatically and immediately deleted from the system as soon as it is used to arm (the code will then need to be redefined by the Grand Master)<br>○ Cannot change one's own code<br>○ If first used to disarm the system (for example, to enter the premises), the code may be used once more for subsequent arming |
| **Guard** | ○ Can only disarm the system<br>○ After entering the code, the system will be disarmed for the predefined time period. After this period expires, the system is automatically armed again.<br>○ Cannot change one's own code |
| **UO Control** | ○ Can only operate utility output(s)<br>○ Cannot change one's own code |

## Describing User Codes

In order to perform system operations and commands, all system users must enter their personal user code at the keypad. Up to **128** different codes are available, to be used for the installer, sub-installer, Grand Master and all other system users.

The Grand Master assigns a unique, numeric user code for each system user from a keypad, or via the Web user interface.

**IMPORTANT:**

- All system users should keep their personal codes confidential, so as to prevent unauthorized system access.
- The installer defines the codes for the installer and sub-installer, but can also define the code for the Grand Master – it is therefore recommended that the Grand Master define a new, confidential Grand Master code after system installation (one other than the default, or an installer-defined code).

The Grand Master determines a "user authority level" for each system user. There are 9 levels to choose from, each of which has its own set of specific permissions for operating the system. The installer in turn programs the user authority level for each system user. See *Table of User Authority Levels, page 14*. The Grand Master can also assign a unique identifying "label" (such as a name) for each system user.

**NOTES:**

- At the time of installation, the installer designates the codes to be either 4 or 6 digits in length. If defined as **6 digits** the length apply for everybody – all users and installer/sub-installer, however if defined as **4 digits** then the Grand Master, installer, and sub-installer must have 4-digit codes, while the other system users can have codes of various lengths, from 1—4 digits.
- Other than the Grand Master, some users (according to their authority levels) can change their own codes – see *Table of User Authority Levels, page 14*.
- After the Grand Master enters a code, for reasons of confidentiality, the digits will not be visible, but will display with asterisks (****). The number of asterisks that display represent the code length.
- You can also define user codes with the Web User Interface.

## Creating or Editing User Codes

➢ **To create or edit a user code from a keypad:**

1. If not known, find out from the installer what the code length requirement is for system users.
2. Enter your Grand Master or user code, and then press **OK.**
3. Scroll to the **Codes/Tags** menu**,** and then press **OK.**
4. At **Define** press **OK.**
5. Scroll to one of the available user index numbers (**User 001—128**), or scroll to **Grand Master,** and then press **OK.**
6. At **Edit Code** (for Grand Master) or at **Edit My Code** (for other users), press **OK.**
7. Enter a unique code, and then press **OK;** a single beep with ACCEPTED displaying indicates a successful code designation, while 3 beeps with REJECT CONFLICT displaying, which indicates an unsuccessful code designation.
8. If not defining a label, press **Exit.**
9. **[Grand Master only]:** To define a label (name/description), scroll to **Edit Label** and press **OK.**
10. For instructions on editing a label, see *Creating or Editing Labels, page 19*. When finished, press **OK,** and then repeat the procedure for defining additional user codes.

## Creating or Editing the Duress-Disarming Code

A Duress-Disarming code is a common code to be used if needed by **all system users** – for the purpose of disarming the system in an emergency situation only (typically when a user is forced to disarm against their will). When activated, the monitoring station is notified, but at the premises there are no visual or audible indications (no alarms will sound).

Both the installer and Grand Master have a role in defining the Duress-Disarming code:

1. Before performing the procedure below for the Grand Master, the installer must first designate the **duress** "authority level" to **one** of the available user index numbers, and then inform the Grand Master which user index number it is.
2. The Grand Master then defines the actual numerical code for that user index number (the actual Duress Disarming code), and then notifies all system users of the code.

➢ **To create or edit a numerical Duress-Disarming code:**

1. If not known, find out from the installer which **user index number** was assigned the "Duress" authority level, as well as the **code length** requirement.
2. Enter your Grand Master code, and then press **OK.**
3. Scroll to the **Codes/Tags** menu**,** and then press **OK.**
4. At **Define** press **OK.**
5. Scroll to the installer-provided user index number (user number) that had been defined with the "Duress" authority level, and then press **OK.**
6. At **Define,** press **OK.**
7. At **Edit Code**, press **OK.**
8. Enter a unique code (cannot be the same as any existing user code) – with the same length that was installer-set for the user codes, and then press **OK;** a single beep with ACCEPTED displaying indicates a successful code designation, while 3 beeps with REJECT CONFLICT displaying indicates an unsuccessful code designation.
9. If not defining a label, press **Exit** (see table in Keypad Buttons, page 12)**.**
10. To define a label (such as "Duress"), scroll to **Edit Label** and press **OK.**
11. See the table below for instructions on editing a label. When finished, press **OK,** and repeat the procedure for defining additional user codes.

## Creating or Editing Labels

➢ **To create or edit a label:**

- Using the scroll buttons to move the cursor, at each cursor position enter (or over-write) a character/symbol by pressing the appropriate button (perhaps repeatedly) to cycle through the button's various options, as listed in the table below. Note that after a few seconds the cursor will automatically advance to the next position. Alternatively, at each cursor position, you can use the toggle keys to go forward/backwards through all possible characters (this may take longer).

| Button | Respective characters/symbols |
|---|---|
| **1** | **1 . , ' ? ! " – ( ) @ /\ : _ + & * # (blank)** |
| **2** | **a b c 2 A B C (blank)** |
| **3** | **d e f 3 D E F (blank)** |
| **4** | **g h i 4 G H I (blank)** |
| **5** | **j k l 5 J K L (blank)** |
| **6** | **m n o 6 M N O (blank)** |
| **7** | **p q r s 7 P Q R S (blank)** |
| **8** | **t u v 8 T U V (blank)** |
| **9** | **w x y z 9 W X Y Z (blank)** |
| **0** | **0 (blank)** |
| **Arm** and **Partial Arm** buttons | Used to toggle through all possible symbols and alpha-numeric characters (including upper and lower cases). |

## Deleting Codes

**NOTES:**

- The Grand Master can delete the user code for any system user.
- Other system users may be able to delete their own code (per authority level)
- Only the Grand Master can delete a Duress-Disarming code

➢ **To delete your (or another) code from a keypad:**

1. Enter your Grand Master or user code, and then press **OK.**
2. Scroll to the **Codes/Tags** menu**,** and then press **OK.**
3. **[Grand Master only]:** Scroll to **Define**, and then press **OK.**
4. **[Grand Master only]:** Scroll to the user number corresponding to the code you want to delete (or scroll to Grand Master to delete your code), then press **OK.**
5. At **Edit My Code ("Edit Code"** for Grand Master), press **OK.**

6. Enter a single **zero (0)** and then press **OK;** ACCEPTED displays, which indicates the code has been deleted.

## Describing Proximity Tags

Proximity-enabled RISCO keypads allow using Proximity tags to operate the system (per user authority level – see *Describing User Authority Levels, page 14*). By holding a personal Proximity tag close to the Proximity sensor of any Proximity-supported keypad, it functions the same as entering a personal user code. The system supports up to 128 Proximity tags—maximum one tag per user.

From keypads with Proximity, the Grand Master can define all aspects of Proximity tags, while system users have a separate procedure in which they can only enroll or delete their own personal tags (they cannot define a label).

**NOTES:**

- For those with user codes already defined, Proximity tags subsequently assigned to them will automatically have the same authority levels as their respective user codes.
- Defining and enrolling Proximity tags can be performed at any keypad except the Slim keypad, however users can operate the system with Proximity tags at any Proximity-compatible keypad – including the Slim keypad.
- For those with the **Maid** authority level**,** they can **only** operate Proximity tags if they already have user codes defined.
- Those with the **User** authority level can only change or delete their own personal Proximity tags, whereas the Grand Master can create and modify Proximity tags for all system users.

## Defining and Enrolling Proximity Tags

➢ **To define and enroll Proximity tags:**

1. Enter your Grand Master code, and then press **OK.**
2. Scroll to the **Codes/Tags** menu**,** and then press **OK**.
3. At **Define** press **OK**.
4. Scroll to the user index number (001—128) for which you will define a Proximity tag – or scroll to **Grand Master** to define your Proximity tag, and then press **OK.**
5. To give a label (name/description), scroll to **Edit Label** and press **OK.** Now define the label (see *Creating or Editing Labels, page 19*).
6. Scroll to **(Re)Write Tag,** and then press **OK.**
7. Within 10 seconds, hold the tag about 2 cm (1 inch) directly above the keypad's built-in Proximity sensor; DEFINED FOR RF ID displays and the keypad sounds a beep, indicating the successful registration of the tag.

   **NOTE:** If a Proximity tag is already registered to another user, USER TAG ALREADY IN MEMORY displays.

## Enrolling My Own Proximity Tag

➢ **To enroll your own (non-Grand Master) Proximity tag:**

1. Enter your user code, and then press **OK.**
2. Scroll to **Codes/Tags,** and then press **OK.**
3. To enroll your Proximity tag, scroll to **Write My Tag,** and then press **OK.**
4. Within 10 seconds, hold your tag about 2 cm (1 inch) directly above the keypad's built-in Proximity sensor; DEFINED FOR RF ID displays and the keypad sounds a beep, indicating the successful registration of the tag.

   **NOTE:** If the Proximity tag is already registered to another user, USER TAG ALREADY IN MEMORY displays.

## Deleting Proximity Tags

Proximity tags can be deleted by the Grand Master, and also by the system user (his/her tag only).

The Grand Master can delete Proximity tags (including the Grand Master's) by the following methods:

- **By index number**—if the user's index number is known
- **By tag**—if the user's index number is not known

System users (not including Grand Master) can delete their own Proximity tags by a different procedure – see *Deleting My Own Proximity Tag, page 23.*

### Deleting a Proximity Tag by its Index Number

➢ **To delete a Proximity tag by its index number:**

1. Enter your Grand Master code, and then press **OK.**
2. Scroll to the **Codes/Tags** menu**,** and then press **OK**.
3. At **Define** press **OK**.
4. Scroll to the user index number (001—128) for which you will delete a Proximity tag – or scroll to **Grand Master** to delete your Proximity tag, and then press **OK**.
5. Scroll to **Delete Tag,** and then press **OK.**
6. At the confirmation prompt, use the Partial Arm button (see table in Keypad Buttons, page 12) to toggle to **Y** (yes) to delete, or to **N** (no) to cancel the operation, and then press **OK;** the system sounds a beep to confirm the deletion.

## Deleting a Proximity Tags by its Tag

➢ **To delete a Proximity tag by its tag:**

1. Enter your Grand Master code, and then press **OK.**
2. Scroll to the **Codes/Tags** menu**,** and then press **OK**.
3. Scroll to **Delete By Tag,** and then press **OK**.
4. Within 10 seconds, hold the tag about 2 cm (1 inch) directly above the keypad's built-in Proximity sensor; TAG DELETED displays and the keypad sounds a beep, indicating the successful deletion.

   **NOTE:** If a tag is not registered, if you position it over the keypad's Proximity sensor TAG NOT DEFINED IN MEMORY displays.

## Deleting My Own Proximity Tag

➢ **To delete your own (non-Grand Master) Proximity tag:**

1. Enter your user code, and then press **OK**.
2. Scroll to **Codes/Tags,** and then press **OK**.
3. Scroll to **Delete My Tag,** and then press **OK.**
4. At the "ARE YOU SURE?" prompt, use the Partial Arm button (see table in Keypad Buttons, page 12) to toggle to **Y** (yes) to delete it, or to **N** (no) to cancel the operation.
5. Press **OK;** if deleted, the keypad beeps and DELETED displays.

# Step 7: Defining Follow-Me Destinations

The Grand Master can define up to 64 Follow-Me (FM) destinations ("user-recipients") that will receive notification of system events such as alarm activations:

- **If system is Cloud-connected** (for example if using a Smartphone with the Cloud-connected iRISCO app): a FM user can receive notifications by **E-mail, push-notification or SMS-notification simultaneously**.
- **If system is not Cloud-connected** (for example if using a mobile phone without the iRISCO app): FM notification is transmitted from the main panel (instead of via the Cloud), and a FM user can receive notification by either **e-mail or SMS**.

**IMPORTANT:** Ensure the system installer configures the Follow Me notification type(s) for each FM recipient. The Grand Master, in turn, inputs the respective telephone numbers and e-mail addresses.

**NOTES:**

- FM requires specific modules installed in the system – ask your installer.
- The ability to transmit FM notifications are disabled/enabled by the installer.

## Examples of Follow-Me Notifications

**Typical FM notification via SMS:**

**Security System:**
**06/06/2019**
**Intruder Alarm**
**Partition 1**
**Entrance**

**Typical FM notification via e-mail:**

**Subject: Alarm Security Message: Fire Alarm**
**System Name: Falafil-Hut Restaurant**
**Event: Fire alarm, zone 2, kitchen door**
**Time: 15 April, 2019; 10:12**
**Partition: Partition 1, first floor**
**Service Contact: Monitoring Station 03, 714-5551212**

## Creating or Editing Follow Me Destinations

➢ **To create or edit a FM destination:**

1. Enter your Grand Master code, and then press **OK.**
2. Scroll to the **Follow Me** menu**,** and then press **OK**.
3. At **Define** press **OK**
4. Scroll to an available FM index number (**01—64**) -- or scroll to an existing FM index number that you want to edit**,** and then press **OK**.
5. To create or edit a label (name/description), scroll to **Label** and press **OK.** Now define the label by entering text and then press **OK** (see *Creating or Editing Labels, page 19*).
6. Scroll to **Destination**, and then press **OK.**
7. Create/edit the FM destination as per the following types and follow the same instructions as in step 5 for creating a label.
   - **[For e-mail notification]:** "EDIT MAIL" will display. Enter an e-mail address. When finished, press **OK.**
   - **[For SMS message notifications]:** "EDIT PHONE" will display. Enter a phone number, including area code, of up to 32 characters in length (including special dialing characters for SMS – see table below). When finished, press **OK.**

   **NOTE:** To utilize a combination of FM notification types for different users (e-mail, SMS), it must be installer-configured.

## Deleting Follow Me Destinations

You can delete existing FM destinations (telephone numbers, e-mail addresses) and labels of FM recipients who are no longer authorized to receive FM notification.

**NOTE:** During system operation, in the event of a false alarm for example, the Grand Master can terminate Follow-Me notification transmissions to the recipients (see *Terminating Follow-Me Notifications, page 71*).

➢ **To delete a Follow Me destination and label:**

1. Enter your Grand Master code, and then press **OK.**
2. Scroll to the **Follow Me** menu**,** and then press **OK**.
3. At **Define** press **OK**.
4. Scroll to the FM index number to delete**,** and then press **OK**.
5. **[To delete the destination]:**
   a. Scroll to **Destination,** and then press **OK.**

b. Press and hold down the **Exit** button (see table in Keypad Buttons, page 12). While pressing it, also press **0**.

c. Press **OK;** the destination (telephone number or E-mail) is deleted.

6. **[To delete the label]:**

a. Scroll to **Label,** and then press **OK.**

b. Scroll to each character to delete, and then press **0** to delete it.

c. Press **OK.**

## Testing Follow-Me Destinations

You can test to ensure notifications sent to FM destinations are received. It is recommended to test every FM destination after it is defined. See *Testing Follow-Me Destinations, page 73.*

## Keyfob Button for Output Control

By default, the * button is used for controlling the outputs.

# Step 8: Performing a Monitoring Station Test

This procedure sends a test message to the monitoring station, according to requirements for EN50131 standards**.**

➢ **To perform a MS test:**

1. At the keypad, enter your Grand Master code, and then press **OK.**
1. At **Activities** press **OK.**
2. Scroll to **Advanced**, and then press **OK.**
3. Scroll to **MS Test,** and then press **OK;** DONE HIT ANY KEY displays and a confirmation beep sounds, indicating the test message was sent.
4. Press any key to exit the test mode.

# Step 9: Performing a Wi-Fi Scan

This procedure displays the available networks to connect to.

➢ **To perform a Wi-Fi Scan:**

1. At the keypad, enter your Grand Master code, and then press **OK.**
2. At **Activities** press **OK.**
3. Scroll to **Wi-Fi**, and then press **OK.**
4. Scroll to **Wi-Fi Scan,** and then press **OK;** from the available networks that appear, scroll to your Router's Wi-Fi network and then select the desired network.
5. Press [enter].

# Step 10: Training System Users

Typically performed by the Grand Master, all system users must be educated and trained in the operational and security aspects of the system, including, for example:

- Responsibility to safeguard portable user devices (keyfobs, remote controls) and the confidentiality of user codes
- All operational procedures – those performed at the premises and remotely (such as obtaining system status, and usage of iRISCO, Web User Interface and SMS)
- Policy for responding to actual alarms (for example intrusion or emergency)
- Activating emergency alarms, including Duress Disarming
- Follow-Me notification (and cancellation of FM for false alarms)
- Silencing an alarm after a false alarm
- Installer/technician and monitoring station contact information – for example, if an installer/technician-assisted system reset is required after alarm activation

# Operating the System

This chapter contains all the operational procedures available for system users.

## Modes of Operation

The system can be operated by authorized users either remotely or locally (at the premises).

### Remote Operational Modes

- **Smartphones via the iRISCO app** (see the app for instructions)
- **Computer browsers via the Web User Interface** (see the website for instructions)
- **Cellphones via SMS**

### Local Operational Modes

- **Keypads**
- **Remote controls and keyfobs**

# Operating Remotely by SMS

You can operate the system remotely by sending SMS commands.

**NOTES:**

- To utilize SMS a GSM module must be installed – ask your installer.
- Commands entered are not case sensitive (upper and/or lower case are ok).
- A separator between command words may be used, or not used.
- To receive an acknowledgement reply (an "operation confirmed" or "operation failed" message), add **RP** to the end of a command (for example 1234 A RP). This can be used for: **arming, disarming, bypassing, activating output, changing Follow-Me definition**.

## SMS Commands

| Command name: | Enter this: |
|---|---|
| **Full arm** | code + A (Example: 1234A) |
| **Partial arm** | code + H |
| **Group arm** | code + G + select group A--D |
| **Full disarm** | code + D |
| **Partition full arm** | code + A + partition number |
| **Partition partial arm** | code + H + partition number |
| **Partition disarm** | code + D + partition number |
| **Get system status** | code + ST |
| **Bypass zone** | code + B + zone number |
| **Un-bypass zone** | code + UB + zone number |
| **View last alarm** | code + AL |
| **Change FM number** | code + FMPHONE + FM serial number + NEW + new phone number |
| **Get SIM credit level** | code + CR |

# Operating Locally by Keypads, Remote Controls/Keyfobs, and Proximity

## Working with Keypads

For a description of keypad buttons used for user operations, see *Step 5: Working with Keypads and User Menus, page 12*.

## Keypad Display Options

### Using the "Multi View" Keypad Display

The keypad displays each partition number, with date, and time. If installer-defined, a letter can also display to indicate the partition's status, as follows:

| Letter | Partition Status |
|---|---|
| **A** | Partition is fully ("away") armed |
| **S** | Partition is partially ("stay") armed |
| **N** | Partition is not ready for arming |
| **R** | Partition is ready for arming |
| **L** | Partition is in an alarm state |

### Using the "Blank" Keypad Display

If installer-defined, two minutes after the last keypad operation the keypad display will appear blank, other than the text "ENTER CODE." This feature prevents the system status from displaying for unintended viewers – for example, from keypads that are located outside the premises. Any user can view status as needed on a "blank display" keypad by entering their code.

**NOTE:** When in blank display mode, the "Ready" indicator will still indicate troubles in the system.

➢ **To view status on a "blank display" keypad:**

- Enter your Grand Master or user code (or place Proximity tag), and then press **OK;** the status will display at the keypad.

  **NOTE:** To enable viewing status on the keypad at all times, the installer must disable the Blank Display mode for the keypad.

## Obtaining System Information

System information/status can be requested and received from keypads and remote controls. As well, system information can be obtained via the iRISCO app and the Web user interface.

Depending on your system configuration, system information/status types received can be visual **(viewed)** or audible **(sound):**

- **Viewed indicators:** keypad text and indicators, keypad and remote control LEDs, iRISCO and Web User Interface texts
- **Sound indicators:** "beeps" and "squawks" from keypads and sirens respectively.
  **NOTES:**
- For a description of all viewed indications, see *Viewed Indicators, page 79*.
- For a description of all sound indications, see *Sound Indicators, page 77*.

| Information requested from: | Types of information that can be received: |
|---|---|
| LightSYS Air<br>Panda Keypad | • Keypad display indicators (icons and/or text)<br>• Keypad beeps (arming/disarming, entry/exit countdown)<br>• Single siren "squawk" for arming confirmation only |
| Slim keypad | • Keypad's LEDs<br>• Keypad beeps (arming/disarming, entry/exit countdown)<br>• Single siren "squawk" for arming confirmation only |
| 4-button Panda keyfob | • Remote control's LEDs<br>• Single siren "squawk" for arming confirmation only |

## Obtaining System Status – Requested from Remote Controls

When requested from an 8-button remote control, you can get system status via the remote control's LED indicators, and via "beeps" and "squawks" from the remote control and siren respectively (see *"Beep" and "Squawk" Sound Indicators, page 77*).

## Obtaining System Status – Requested from Keypads

When requested from a keypad, you can get **both audible and visual system status** – viewed via the keypad's display (or via the Slim keypad's LED indicators), and heard via keypad "beeps" and siren "squawks" (see *"Beep" and "Squawk" Sound Indicators, page 77*).

| Keypad | Procedure: | Status indications received: |
|---|---|---|
| Panda | Press scroll keys | Partition status (R=ready/NR=not ready). |
| Slim | • **Quick mode:** Press [#?] for 2 seconds<br>• **High Security mode**: Press [#?] for 2 seconds ➤ enter **code** or use **Proximity tag** | • LED indications from the keypad (see *Slim Keypad Indicators, page 79*)<br>• Sound (beeps) from keypad (*see "Beep" and "Squawk" Sound Indicators, page 77*). |

## Obtaining System Information – Requested from, and Viewed at Keypads

The following system information is **viewed only** – on keypad displays (not relevant for the Slim keypad):

- **Event Log**
- **System Troubles**
- **Alarm Memory**
- **Partition Status**
- **Zone Status**
- **Service Information**
- **View IP Address**
- **Cloud Status**
- **Wi-Fi Status**

**NOTE:** For Slim keypads, see *Slim Keypad Indicators, page 79* for a description of the system information provided by the keypad's LED indicators.

## Viewing the Event Log

View all types of system events, are stored in chronological order. The event log holds up to 2000 events.

**NOTE:** The event memory cannot be completely erased. When the event log exceeds the maximum (2000) events, the oldest events will be over-written by the newest events.

➢ **To view the event log:**

1. At the keypad, enter your Grand Master code, and then press **OK**.
2. Scroll to **Event Log,** and then press **OK.**
3. Scroll through the various events to view their description and time/date of occurrence.

   **NOTE:** Use the Partial Arm (toggle) button (see table in Keypad Buttons, page 12) to skip 100 events, either forwards or backwards.

## Viewing System Troubles

A flashing power icon (⏻) on the keypad indicates there are current troubles in the system that you can view.

➢ **To view all system troubles:**

1. At the keypad, enter your Grand Master or user code, and then press **OK.**
2. Scroll, to **View** and then press **OK.**
3. Scroll to **Trouble** and then press **OK.**
4. Scroll to view current troubles found in the system.

## Viewing Alarm Memory

View the 5 most recent alarms stored in the system memory.

➢ **To view the 5 most recent alarms:**

1. At the keypad, enter your Grand Master or user code, and then press **OK**.
2. Scroll to **View** and then press **OK.**
3. Scroll to **Alarm Memory** and then press **OK.**
4. Scroll to view the alarms.

## Viewing Partition Status

View the status for individual partition(s) or all partitions to which the keypad is assigned (according to your user authority level).

➢ **To view partition status for the keypad-assigned partition:**

1. At the keypad, press the **scroll** button to view all status information for the first block of partitions (partitions 1—10), such as **R** (ready to arm) or **NR** (not ready to arm).
2. Press **scroll** again to view the status for the next block of partitions –you can repeat this to view the status of all partitions (32 maximum).

➢ **To view partition status for all partitions:**

1. At the keypad, enter your Grand Master or user code, and then press **OK**.
2. Scroll to **View** and then press **OK.**
3. Scroll to **Part. Status** and then press **OK.**
4. While scrolling through the partitions, for each you can view its status, such as **R** (ready to arm) or **NR** (not ready to arm).

## Viewing Zone Status

View the status of all zones in the system.

➢ **To view zone status:**

1. At the keypad, enter your Grand Master or user code, and then press **OK**.
2. Scroll**,** to **View** and then press **OK.**
3. Scroll to **Zone Status** and then press **OK.**
4. Scroll through the zones to view their current status.

## Viewing Service Information

View the following types of service information (per user authority level):

- **Installer/technician information**
- **System Version**
- **Serial Number**
- **Panel ID**

### Installer Information

➢ **To view installer/technician information:**

1. At the keypad, enter your Grand Master or user code, and then press **OK**.
2. Scroll to **View** and then press **OK.**
3. Scroll to **Service Information** and then press **OK.**
4. Scroll to **Installer** and then press **OK,** installer-input information displays.

### System Version

➢ **To view the system software version**

1. At the keypad, enter your Grand Master or user code, and then press **OK**.
2. Scroll to **View** and then press **OK.**
3. Scroll to **Service Information** and then press **OK.**
4. Scroll to **System Version**, then press **OK;** the system software version displays.

### Serial Number

➢ **To view the main panel serial number:**

1. At the keypad enter your Grand Master or user code, and then press **OK**.
2. Scroll to **View** and then press **OK.**
3. Scroll to **Service Information** and then press **OK.**
4. Scroll to **Serial Number** and then press **OK,** the main panel's 11-digit serial number displays.

### Panel ID

➢ **To view the main panel ID number:**

1. At the keypad enter your Grand Master or user code, and then press **OK**.
2. Scroll to **View** and then press **OK.**
3. Scroll to **Service Information** and then press **OK.**
4. Scroll to **Panel ID** and then press **OK,** the panel's 15-digit ID number displays.

## Viewing IP Address

View the IP address of the system.

➢ **To view the IP address:**

1. At the keypad, enter your Grand Master code, and then press **OK**.
2. Scroll to **View** and then press **OK.**
3. Scroll to **View IP Address** and then press **OK;** the IP address displays.

## Cloud Status

View the status of the Cloud.

➢ **To view Cloud status:**

1. At the keypad, enter your Grand Master or user code, and then press **OK**.
2. Scroll**,** to **View** and then press **OK.**
3. Scroll to **Cloud Status** and then press **OK.**
4. View the Cloud Status, which will display as Connected or Disconnected.

## Wi-Fi Status

View the Wi-Fi signal strength.

➢ **To view Wi-Fi status:**

1. At the keypad, enter your Grand Master or user code, and then press **OK**.
2. Scroll**,** to **View** and then press **OK.**
3. Scroll to **Wi-Fi Status** and then press **OK.**
4. View the Wi-Fi Status, which will display as Poor, Good or Perfect.

# Bypassing Zones

If installer-enabled, you can arm a partition – even if a zone within that partition is not secured – by **manually** bypassing that zone.

If not bypassed, when a zone is not secured, or "open" (OP) for whatever reason, by default it will be in a "not-ready" (NR) state, meaning the system is not ready to be armed, and the keypad's "ready" indicator will not display.

Typical reasons for bypassing a zone are, for example, to arm the system while allowing access a zone in an otherwise protected area, or to arm the system while temporarily circumventing the arming of a specific zone.

**NOTE:** If installer-configured, you can "force arm" which **automatically** bypasses specific zone(s) upon arming. See *Forced Arming (Arming with Automatically-Bypassed Zones), page 50.*

**CAUTION:** Zone bypassing, whether manual or automatic, may compromise the level of protection the system can offer.

## Viewing Not-Ready Zones

Before considering whether to bypass zones, first view the non-secured/not-ready zones in the system.

**NOTE:** Users can only view the "not-ready" zones that they are allowed to operate, according to their user authority level (see *Describing User Authority Levels, page 14)*.

➢ **To view not-ready zones:**

1. At the keypad, enter your Grand Master or user code, and then press **OK.**
2. Scroll, to **View** and then press **OK.**
3. Scroll to **Zone Status,** and then press **OK.**
4. Scroll to view the zones, which will display as READY or NOT READY.

## Defining Zone Bypass Status

If installer-configured, you can perform either the following procedure to bypass zones, or the quick procedure for one-time-only bypassing (see *Quickly Bypassing/Un-Bypassing Zones on a One-Time Basis, page 40*).

➢ **To define a zone's bypass status:**

1. At the keypad, enter your Grand Master or user code, and then press **OK**.
2. Scroll to **Activities** and then press **OK.**
3. At **Bypass** press **OK.**
4. At **Zones** press **OK.**
5. Scroll to select from the following bypass options:
   - **One Time Only:** Bypasses the selected zone once only – at the next system arming (the zones will then not be bypassed at subsequent armings)
   - **Permanent Bypass:** Bypasses the selected zone on a continual basis, upon each system arming
   - **Bypass Reset:** Un-bypasses (removes the bypass) for all zones
   - **Bypass Recall:** Reverts to the most recent zone-bypass state (if a Bypass Reset was recently performed)
6. Perform the following additional steps in the table below, according to the option you select:

   **NOTES:**

   - The default for all zones is **N** (not bypassed)
   - If a zone is bypassed, the full arming indicator does not display on the keypad when in full arming (Away arming) mode

| Bypass Option | Procedure: |
|---|---|
| **One-Time-Only** | a. At the One-Time-Only option, press **OK**.<br>b. Scroll through the zones to one for which you want to change its bypass status.<br>c. Toggle to either **Y** (to bypass) or **N** (to un-bypass), and then press **OK.** |
| **Permanent Bypass** | a. At the Permanent Bypass option, press **OK.**<br>b. Scroll through the zones to one for which you want to permanently bypass.<br>c. Toggle to either **Y** (to bypass) or **N** (to un-bypass), and then press **OK**. |
| **Bypass Reset** | a. At the Bypass Reset option, press **OK.**<br>b. Press **OK** again to confirm; the keypad beeps, indicating that all zones have been reset to a not-bypassed (default) state. |
| **Bypass Recall** | a. At the Bypass Recall option, press **OK,** then press **OK** again to confirm.<br>b. Scroll through the zones to view that previously un-bypassed zones are again bypassed. You can also toggle to **N** at any zone to cancel its bypass state.<br>c. Press **OK;** the keypad beeps, indicating the successful operation. |

## Quickly Bypassing/Un-Bypassing Zones on a One-Time Basis

If installer-configured, you can quickly access the "**one-time-only**" bypass option (see table above). This may be useful, for example, if you want to bypass zone(s) on a one-time basis, or if you have previously permanently bypassed zone(s) and you want to un-bypass them on a one-time basis.

➢ **To perform a quick "one-time-only" bypassing/un-bypassing of zones:**

1. At the keypad, enter your Grand Master or user code **(do not** enter OK after).
2. Press a **scroll** key; you will be prompted to bypass the first zone (zone 1).
3. Scroll to the zone you want to bypass, and then toggle using the Partial Arm button to either **Y** to bypass or **N** to un-bypass.
4. Scroll to additional zone(s) as needed and repeat step 3 for each.
5. When finished, press **OK.**

# Arming & Disarming the System

System arming protects the premises by triggering alarms and sending notifications upon detection from any installed detector. System users can arm/disarm the system according to their user authority level.

## Arming/Disarming Modes

LightSYS Air offers the following modes of arming/disarming the system:

| Arming Modes |
|---|
| ✓ **Full ("Away") arming** |
| ✓ **Partial ("Stay" or "Home") arming** |
| ✓ **Partition arming** |
| ✓ **Group arming** |
| ✓ **Automatic arming and disarming** |
| ✓ **Arming with system troubles** |
| ✓ **Forced arming (arming with automatically- bypassed zones)** |
| ✓ **Bypassing zones (arming with manually-bypassed zones)** |
| ✓ **Keyswitch arming** |
| ✓ **Forced keyswitch or Proximity arming** |
| ✓ **Low-battery arming** |
| ✓ **Strobe arming** |
| **Disarming Modes** |
| ✓ **Disarming all partitions** |
| ✓ **Disarming an individual partition** |
| ✓ **Duress disarming** |
| ✓ **Disarming with alarm activation (silencing an alarm)** |

## Before Arming the System

**IMPORTANT:** Before arming the system, do the following:

✓ **Ensure the premises have been vacated.** Note that the **entry/exit delay** provides a specific period of time to exit the premises before alarms are activated.

✓ **Observe the system's status indicators, troubles, and READY status:**

- **Check status indicators** – View icon indicators on keypad displays, or LED indicators on Slim keypads and remote controls.
- **Check that all zones are ready to be armed (no open zones)** –view the READY indicator on the keypad (see *Keypad Indicators, page 79)*

- **Check for system troubles.** It is good practice to scroll through and view all troubles, whether or not your system is configured to require viewing them before arming.

**CAUTION:** Depending on the system configuration, you may be able to arm the system while bypassing all (or specific) open zones, and/or arm while overriding system troubles, however, depending on the circumstances these arrangements may compromise the level of protection that the system offers.

## Arming Procedures

- For arming/disarming via SMS, see *Operating Remotely by SMS, page 29*
- For arming/disarming via iRISCO and Web User Interface, see the respective applications.

### Full ("Away") Arming

Full arming requires that all of the premises be vacated.

➢ **To fully arm the system:**

1. Verify that the premises are vacated, and that the system is ready to be armed (view the READY indicator).
2. If not ready to arm, secure (or bypass) any open zones see *Bypassing Zones (Arming with Manually-Bypassed Zones), page 51* and also *Forced Arming (Arming with Automatically-Bypassed Zones), page 50*.
3. If unable to arm, scroll to view system trouble messages, and resolve accordingly. If installer-defined, you can arm while overriding all current troubles (see *Arming with System Troubles, page 50*).
4. Perform the following arming procedure in the table below.

   **NOTES:**

   - If you enter your code incorrectly, three short beeps will sound. Re-enter the code.
   - Keyfob and remote control buttons can have different functions and are installer-defined.
   - Proximity arming is installer-defined and can vary per system user.

| Device | Full-Arming procedure: |
|---|---|
| | ❖ **Quick Arm mode:** Press<br>❖ **High Security mode:** Enter **code** ➢ press<br>❖ **Proximity mode:** Place **Proximity tag** |
| | ❖ **Quick Arm mode:** Press .<br>❖ **High security mode:** Press ➢ enter **code**<br>❖ **Proximity mode:** Press ➢ place **Proximity tag**<br>**NOTE:** If needed, press * to "wake-up" the Slim keypad |
| | ❖ **Quick mode:** Press . |

5. Leave the premises before the end of the exit delay period. During the exit delay period, you can observe the following indicators at the keypad:
   - The keypad beeps slowly and repeatedly, followed by faster beeps at end of exit delay time period
   - The exit-delay countdown appears on the keypad display, and the full arm icon flashes. On the LightSYS keypad the red LED is flashing.

   **NOTE:** You can press the current keypad's **Exit** button during the exit delay time period to silence the beeps (other keypads in the system will still beep).

6. At the end of the exit delay time period, the **Full-Arm** icon appears without blinking, and ARMED displays. On the LightSYS keypad, the red LED is lit without flashing.

## Partial ("Stay" or "Home") Arming

Partial arming allows the non-armed areas of the premises to be inhabited.

➢ **To partially arm the system:**

1. Verify that the system is ready to be armed (view the READY indicator).
2. If not ready to arm, secure (or bypass) any open zones see *Bypassing Zones (Arming with Manually-Bypassed Zones), page 51* and also *Forced Arming (Arming with Automatically-Bypassed Zones), page 50*.
3. If unable to arm, scroll to view system trouble messages, and resolve accordingly. If installer-defined, you can arm while overriding all current troubles (see *Arming with System Troubles, page 50*).

4. Perform the following arming procedure in the table below.

**NOTES:**

- If you enter your code incorrectly, three short beeps will sound. Re-enter the code.
- Keyfob and remote control buttons can have different functions and are installer-defined.
- Proximity arming is installer-defined, and can vary per system user.

| Device | Partial-Arming procedure: |
|---|---|
| | ❖ **Quick Arm mode:** Press <br> ❖ **High Security mode:** Enter **code** ➢ press <br> ❖ **Proximity mode:** Place **Proximity tag** |
| | ❖ **Quick mode:** Press <br> ❖ **High security mode:** Press ➢ enter **code** <br> ❖ **Proximity mode:** Press ➢ place **Proximity tag** <br> **NOTE:** If needed, press * to "wake-up" the Slim keypad |
| | ❖ **Quick mode:** Press . |

5. Leave the premises before the end of the exit delay period. During the exit delay period, you can observe the following indicators at the keypad:
   - The keypad beeps slowly and repeatedly, followed by faster beeps at end of exit delay time period
   - The exit-delay countdown appears on the keypad display, and the full arm icon flashes. On the LightSYS keypad the red LED is flashing.

   **NOTE:** You can press the current keypad's **Exit** button during the exit delay time period to silence the beeps (other keypads in the system will still beep).

6. At the end of the exit delay time period, the **Part-Arm** and **Full Arm** icons both appear without blinking, and AT HOME ARMED displays. On the LightSYS keypad, the red LED is lit without flashing.

## Partition Arming

Each partition in the system (32 maximum) is a separate entity, whereas it can be independently armed/disarmed (fully or partially) by those users with the appropriate authority level – regardless of the state of the other partitions in the system.

Each zone (detector) of any type is associated with (assignable to) one or more partitions.

A partitioned system may have one or more **common zones** ("shared zones") – for example, a common front door with a contact detector that is used by multiple offices.

**NOTES:**

- A common zone is **armed** only if **all partitions** to which the zone is associated are armed (may be armed differently, depending on the installer's configuration).
- A common zone is **disarmed** if **any of the partitions** to which the zone is associated are disarmed (may be disarmed differently, depending on the installer's configuration).

The Grand Master has access to all partitions and can use any keypad to access any partition. Other users can use only designated keypads for the partitions they are authorized to access, according to user authorization level and configuration.

You can arm either ALL partitions (with full-arming or partial-arming for each partition's zone/s), or arm 1 INDIVIDUAL partition at a time (with full-arming or partial arming for that partition's zone/s).

## Arming All Partitions

Arm all partitions at the same time, as either fully-armed or partially-armed.

➢ **To arm all partitions:**

1. Verify that the areas of the premises to be armed are vacated, and that the system is ready to be armed (view the READY indicator).
2. If not ready to arm, secure (or bypass) any open zones, see *Bypassing Zones (Arming with Manually-Bypassed Zones), page 51* and also *Forced Arming (Arming with Automatically-Bypassed Zones), page 50*.
3. If unable to arm, scroll to view system trouble messages, and resolve accordingly. If installer-defined, you can arm while overriding all current troubles (see *Arming with System Troubles, page 50*).
4. Perform the following arming procedure for **ALL** partitions as either fully-armed or partially-armed:

| For this: | Do this to arm ALL partitions: |
|---|---|
| | ❖ **Fully-arm-all partitions:** Enter **code** ➢press **full arm button** ➢If only 1 partition, it is now fully-armed. For all partitions, at the All? prompt press **full arm button**.<br>❖ **Partially-arm all partitions:** Enter **code** ➢press **partial arm button** ➢ If there is only 1 partition, it's now partially-armed. For all partitions, at the All? prompt press **partial arm button**.<br>❖ **Fully or partially arm all partitions with Proximity:** Place tag at kepad ➢ at "All?" prompt press either **full arm button** or **partial arm button**.<br>**NOTE:** The number of partitions (32 maximum) that can be armed using a Proximity tag is installer-configured per user. |
| | ❖ **Quick mode:** Press (full-arm) or (partial-arm).<br>❖ **High security mode:** Press (full-arm) or (partial-arm).➢ enter **code**<br>❖ **Proximity arming:** Press (full-arm) or (partial-arm) ➢ place tag at keypad<br>**NOTE:** The number of partitions (32 maximum) that can be armed using a Proximity tag is installer-configured per user. |

| For this: | Do this to arm ALL partitions: |
|---|---|
| | ❖ **Quick mode:** Press 🔒 |

### Arming an Individual Partition

Arm an individual partition, as either fully-armed or partially-armed. For multiple partitions, repeat this procedure as needed.

➢ **To arm an individual partition:**

1. Verify that the areas of the premises to be armed are vacated, and that the system is ready to be armed (view the READY indicator).
2. If not ready to arm, secure (or bypass) any open zones, se*e Bypassing Zones (Arming with Manually-Bypassed Zones), page 51* and also *Forced Arming (Arming with Automatically-Bypassed Zones), page 50*.
3. If unable to arm, scroll to view system trouble messages, and resolve accordingly. If installer-defined, you can arm while overriding all current troubles (see *Arming with System Troubles, page 50*).
4. Perform the following arming procedure for **1 INDIVIDUAL** partition, as either fully-armed or partially-armed.
5. Repeat the following procedure for each additional individual partition to arm:

| For this: | Do this to arm an INDIVIDUAL partition: |
|---|---|
| | ❖ **Fully-arm an individual partition:** Enter **code** ➢press **full arm button** ➢ enter the 2-digit partition number (example 03) ➢press **full arm button**.<br>❖ **Partially-arm an individual partition:** Enter **code** ➢press **partial arm button** ➢ enter the 2-digit partition number (example 03) ➢press **partial arm button**.<br>❖ **Fully or partially arm 1 partition with Proximity:** Place tag at keypad ➢ at "All?" prompt scroll to the partition to arm ➢press either **full arm button** or **partial arm button**.<br>**NOTE:** The number of partitions (32 maximum) that can be armed using a Proximity tag is installer-configured per user. |

| For this: | Do this to arm an INDIVIDUAL partition: |
|---|---|
| | ❖ **Quick mode:** Press partition number (**1—3**) ➢ press (full-arm) or (partial-arm).<br>❖ **High security mode:** Press partition number (**1—3**) ➢ press (full-arm) or (partial-arm). ➢ enter **code**<br>❖ **Proximity arming:** Press partition number (**1—3**) ➢ press (full-arm) or (partial-arm) ➢ place tag at keypad<br>**NOTES:**<br>• The number of partitions (32 maximum) that can be armed using a Proximity tag is installer-configured per user.<br>• You can select only partition **1, 2** or **3** to disarm only that specific partition. Other partitions cannot be separately disarmed from the keypad. |

## Group Arming

In each partition the zones are assignable to up to 4 **groups,** enabling 4 levels of partial-arming in each partition. Group arming can be performedusing the Panda Keypad:

**NOTE:** Group arming can require entering the user code or it can be installer-configured to be "quick armed" (not requiring a user code).

➢ **To arm a group:**

1. Verify that the areas of the premises to be armed are vacated, and that the system is ready to be armed (view the READY indicator).
2. If not ready to arm, secure (or bypass) any open zones, s*ee Bypassing Zones (Arming with Manually-Bypassed Zones), page 51* and also *Forced Arming (Arming with Automatically-Bypassed Zones), page 50*.
3. If unable to arm, scroll to view system trouble messages, and resolve accordingly. If installer-defined, you can arm while overriding all current troubles (see *Arming with System Troubles, page 50*).
4. Enter your **code** (unless installer-configured to not require it), then perform the following procedure:

| For this: | Do this to GROUP arm: |
|---|---|
| | ❖ **If user has permission for 1 partition:** Press the group to arm (**A, B, C,** or **D)** key for 2 seconds. To arm another group for this single partition, repeat this procedure.<br>❖ **If user has permission for multiple partitions:** Press the group to arm (**A, B, C,** or **D)** for 2 seconds ➢ enter the partition number (example 03) ➢ press the group again for 2 seconds. To arm another group for this or another partition, repeat this procedure.<br>**NOTE:** If configured for **quick arming**, press the group letter button for 2 seconds corresponding to the group(s) you want to arm; the selected groups are armed. |

## Automatic Arming and Disarming

You can have the system arm and disarm automatically for re-occurring weekly schedules, one-time schedules, and vacation schedules (see *Defining Automatically-Operated UOs and Arming Operations, page 61*).

## Arming with System Troubles

If installer-configured, you can arm the system while overriding all current troubles, provided you first view and confirm all the troubles.

**CAUTION:** Depending on the type of troubles, arming while overriding troubles may compromise the level of protection the system can offer.

➢ **To arm the system while overriding troubles:**

1. If you do not succeed to arm, use the scroll buttons to view all the system troubles; after viewing them all, OVERRIDE TROUBLE? will appear.
2. Toggle to the **Y** (yes) option to override them all, or toggle to **N** (no) to cancel the override request.
3. Press **OK.**

## Forced Arming (Arming with Automatically-Bypassed Zones)

Forced arming enables arming any partitions with one or more open zones (zones that are "not ready/not secured" or "faulty"), which will be **automatically** bypassed.

**NOTE:** To **manually** bypass specific zone(s) – for example, on a one-time basis, see *Defining Zone Bypass Status, page 39* and *Quickly Bypassing/Un-Bypassing Zones on a One-Time Basis, page 40.*

**CAUTION:** Forced arming / bypassing zones may compromise the level of protection the system can offer.

➢ **To force-arm the system:**

1. Ensure the installer has enabled forced-arming, otherwise arming the system with any open zone will not be possible.
2. Arm the system in a normal manner; the system will be armed while simultaneously bypassing all open zones.

   **NOTE:** If any open zone is subsequently secured during the arming period, it will no longer be bypassed (it will be operational).

## Bypassing Zones (Arming with Manually-Bypassed Zones)

See *Defining Zone Bypass Status, page 39* and *Quickly Bypassing/Un-Bypassing Zones on a One-Time Basis, page 40*.

## Keyswitch Arming

If the system is equipped with a keyswitch, perform arm and disarm operations by "toggling" through the respective modes.

## Forced Keyswitch or Proximity Arming

When using a keyswitch or Proximity you can force-arm any partition that has one or more open zones (these zones will be automatically bypassed upon arming). See *Forced Arming (Arming with Automatically-Bypassed Zones), page 50.*

## Low-Battery Arming

If installer-configured, low battery arming enables arming the system when a low battery condition is detected in the main panel backup battery, or in a power supply expansion module battery.

## Strobe Arming

If installer-configured, strobe arming enables the internal or external strobe (upon automatic activation by a UO) to provide a 10-second strobe confirmation after arming.

# Disarming Procedures

Disarming deactivates all zones/detectors in the partitions, so they don't trigger alarms. Disarming also resets the system to normal operation, unless the system is configured to require the intervention of a technician/installer for performing a system reset (see *Resetting the System with Installer/Technician Intervention, page 55).*

When disarming at keypads, for security purposes all users are always required to input their user codes. When disarming at remote controls and keyfobs, a built-in "rolling code" feature provides extra security without the need for the user code, although a unique PIN code may be used with an 8-button remote control.

## Disarming All Partitions

You can disarm all fully-armed or partly-armed partitions at the same time (per your user authority level – **"all" refers to the maximum partitions a user's authority level enables him/her to operate)** – which may not necessarily be all the partitions in the system.

➢ **To disarm all partitions:**

1. If outside the premises, open a designated "entry" door. The keypad beeps, indicating that the entry delay time period has started.
2. Before the end of the entry delay time period, perform the following procedure:

**NOTES:**

- If you enter your code incorrectly, three short beeps will sound. Re-enter the code.
- Upon disarming, a confirmation beep or squawk may sound**.**

| For this: | Do this to disarm ALL partitions: |
|---|---|
| | ❖ **Disarm all partitions:** Enter **code** ➢ press **disarm button** ➢ if only 1 partition, it is now disarmed. For all partitions, at the "All?" prompt press **disarm button** again.<br>❖ **Proximity disarm:** Place **tag** ➢ press **disarm button** |
| | ❖ **Disarm all partitions:** Press ➢ enter **code**<br>❖ **Proximity disarm all partitions:** Press ➢place **tag** |

## Disarming an Individual Partition

You can disarm 1 individual partition at a time (as fully-armed or partly-armed).

➢ **To disarm an individual partition:**

1. If outside the premises, open a designated "entry" door. The keypad beeps, indicating that the entry delay time period has started.
2. Before the end of the entry delay time period, perform the following procedure:

   **NOTES:**

   - If you enter your code incorrectly, three short beeps will sound. Re-enter the code.
   - Upon disarming, a confirmation beep or squawk may sound**.**

| For this: | Do this to disarm an INDIVIDUAL partition: |
|---|---|
| | ❖ **Disarm an individual partition:** Enter **code** ➢ press **disarm button** ➢ enter the 2-digit partition number (example 03) ➢ press **disarm button.**<br>❖ **Proximity disarm:** Place **tag** ➢ enter the 2-digit partition number (example 03) ➢ press **disarm button**<br>**NOTE:** You can select only partition **1, 2,** or **3** to disarm only that specific partition. Other partitions cannot be separately disarmed from the keypad. |
| | ❖ **Disarm partition:** Enter the 2-digit partition number (example 03) ➢Press **disarm button** ➢ enter **code**<br>❖ **Proximity disarm partition:** Press ➢ place **tag** |
| | ❖ Press |

3. Repeat the procedure for additional individual partitions to delete.

## Duress Disarming

See *Activating a Duress-Disarming Alarm, page 58*.

## Disarming with Alarm Activation (Silencing an Alarm)

Depending on the system configuration, alarms will typically sound and have visual indications at the keypad. If you disarm the system during an alarm activation, it will also serve to silence the alarm.

**CAUTION: Before you disarm with an alarm, ensure that it is a false alarm, or that no danger will result by silencing the alarm.**

Once the cause of the alarm has been determined (and any steps for resolution taken, if needed), depending on the configuration, the system may require a "Technician Reset" – the intervention of an installer/technician to reset the system (see *Resetting the System with Installer/Technician Intervention, page 55*).

**IMPORTANT:** If the alarm was triggered by a heat/smoke detector, in addition to the audible alarm, the fire indicator will display on the keypad indicating the fire system must first be reset before it can return to normal operation, and before one can re-arm the system (see *Disabling Smoke/Heat Detectors after Alarm Activation, page 56*).

**CAUTION: During or after any type of alarm activation (manual or automatic), before approaching or entering the premises, first be certain that there is no danger present. You may need to contact responding agencies (police, fire, etc.) in order to confirm whether it is safe to return to the premises.**

➢ **To disarm with an alarm:**

1. If outside the premises, open a designated "entry" door; the keypad beeps, indicating that the entry delay time period has started.
2. Observe the following alarm activation indicators:
   - The siren sounds
   - On keypads with displays, the **full-arm** icon flashes and the activated **zone** displays (for multiple activations, the first activation displays).
   - On Slim keypads, the red LED flashes rapidly
3. Enter your code (or place Proximity tag near the keypad's Proximity sensor).
4. Press the **Disarm** button.
5. For keypads with displays, scroll to view all zones with alarm activations.
6. If installer-intervention is required to reset the system after an alarm, see *Resetting the System with Installer/Technician Intervention, page 55*.

# Returning the System to Normal Operation after Alarm Activation

After an alarm activation, returning the system to normal operation requires one of the following:

- A system disarming performed by the Grand Master or system user with appropriate user authority level. See *Disarming with Alarm Activation (Silencing an Alarm), page 53*.
- A system disarming by Grand Master or system user, followed by the installer/ technician resetting the system (required after each alarm activation). See *Resetting the System with Installer/Technician Intervention, page 55*.
- A procedure for the Grand Master to disable and reset Smoke/Heat detectors after a smoke/heat alarm activation. See *Disabling Smoke/Heat Detectors after Alarm Activation, page 56*.

## Resetting the System with Installer/Technician Intervention

The following methods of resetting the system require installer/technician intervention (note that a system user must contact the installer/technician after each alarm activation):

- **Anti-Code reset** (also known as "**Technician reset**")
- **Configuration Software reset**

## Anti-Code Reset (Technician Reset)

If installer-enabled, upon alarm activation the system will not be ready to arm until the technician/installer provides you with a code that allows you to reset the system.

➢ **To perform an anti-code system reset:**

1. Ensure the system is disarmed.
2. After an alarm activation, while you see CALL INSTALLER displaying on the keypad, press the **Exit** button to access the Anti-Code menu.
3. At the **Anti-Code** option press **OK**.
4. Call the technician/installer and read the randomly generated code that displays on the keypad; the technician/installer will then give you an anti-code number.
5. Enter the anti-code number you received, and then press **OK;** the system resets.

## Configuration Software Reset

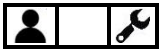

Upon alarm activation, the system will not be ready to arm until the technician/installer performs a remote system reset using a computer with the **CS** (Configuration Software). Only a 1-hour single access to the CS is allowed per alarm activation.

**NOTE:** Depending on the system's configuration, the Grand Master may need to first authorize (enable) the technician/installer to access the CS.

### Enabling Technician/Installer CS Access for Resetting the System

➢ **To enable the technician/installer CS access for resetting the system:**

1. Ensure the system is disarmed.
2. Discuss with the technician/installer which communication channel (**IP or GSM**) to utilize for his/her computer to remotely communicate with the system, for the purpose of performing a system reset using the CS.
3. At the keypad, enter your Grand Master code, and then press **OK.**

4. At **Activities** press **OK.**
5. Scroll to **Config SW,** and then press **OK;** either CS CONNECT or ENABLE CS displays:
   - **[If ENABLE CS displays]:** The system is **not** currently configured to allow the technician/installer to access the CS. For you to authorize the technician/installer a one-time access to the CS, press **OK,** scroll to **CS Connect**, and then proceed to step 6.
   - **[If CS CONNECT displays]:** The system is currently configured to allow the technician/installer to access to the CS. Proceed to step 6.
6. At **CS Connect** press **OK.**
7. Scroll to the communication channel that the technician/installer computer will utilize to communicate with the system (**IP or GSM**).
8. Press **OK;** DONE displays, and the technician/installer now has a 1-hour time limit to perform a CS reset of the system.

## Disabling Smoke/Heat Detectors after Alarm Activation

After a fire alarm, the Grand Master can disable the activated smoke/heat detector(s) in the system for an installer-set interval of up to 90 seconds in order to reset the detectors for normal operation.

➢ **To disable a fire alarm:**

1. At the keypad, enter your Grand Master code, and then press **OK**.
2. At **Activities** press **OK.**
3. Scroll to **Advanced** and then press **OK.**
4. At **Switch Aux** press **OK;** the keypad beeps and the smoke/heat alarms are disabled.
5. You may need to repeat this procedure until the detectors no longer detect any remaining smoke or heat.

# Activating Emergency Alarms

All RISCO keypads are equipped with specific buttons to use for quick activation of emergency alarms:

- **Panic ("Police") alarm**
- **Fire alarm**
- **Auxiliary / emergency alarm**
- **Duress-Disarming alarm**

**NOTE:** RISCO Panda keyfobs can also be used to also activate Panic alarms – ask your installer.

Upon alarm activation, monitoring station(s) can be automatically notified, which in turn contact responding agencies (fire, police, etc.). See Compliance Statement.

**CAUTION: During or after any type of alarm activation (manual or automatic), before approaching or entering the premises, first be certain that there is no danger present. You may need to contact responding agencies (police, fire, etc.) in order to confirm whether it is safe to return to the premises**.

## Activating a Panic ("Police") Alarm

| Keypad: | Press this: |
|---|---|
| Panda | |
| Slim | Buttons 1and 2 |

## Activating a Fire Alarm

| Keypad: | Press this: |
|---|---|
| Panda | Buttons 4 and 6 |
| Slim | Buttons 3 and 4 |

## Activating an Auxiliary ("Emergency") Alarm

| Keypad: | Press this: |
|---|---|
| Panda keypad | Buttons 7 and 9 |
| Slim | Buttons 5 and 6 |

## Activating a Duress-Disarming Alarm

Activated from keypads only, a Duress-Disarming alarm can be activated by all system users during a "duress" emergency situation (typically, where a user is forced to disarm the system against their will). Duress disarming "silently" disarms the system (no alarms will sound at the premises) while it simultaneously sends a duress alarm to the monitoring station, which in turn can quickly notify responding agencies, such as the police.

Instead of entering a user code, the user enters the special Duress-Disarming code instead (see *Creating or Editing the Duress-Disarming Code, page 17*).

**[For Proximity Users]:** If a user has already armed the system using a Proximity tag, the user can activate a Duress-Disarming alarm by using the **duress code only** (the user should not use the tag).

**IMPORTANT:** The same code is used by all system users, and it should be kept confidential from non-users.

**CAUTION:** A Duress-Disarming alarm should be activated only when needed and not haphazardly, as monitoring stations and responding agencies treat duress alarms seriously and may take immediate action.

| Keypad: | Do this: |
|---|---|
| Panda keypad | Enter **duress code** ➢ press OK |
| Slim | Press 🔓 ➢ enter **duress code** |

# Describing Utility Outputs

The system supports up to 4 programmable utility outputs (UOs) in the system. UOs typically automatically activate **external devices and appliances** such as lighting and air conditioning, or system **arming/disarming** – in response to installer-defined activation criteria, such as events and other triggers related to alarms, zones, partitions, system events, user actions, and scheduled operations. Ask your installer about configuring UOs in your system.

To schedule the automatic operation of a UO, the user inputs specific criteria, such as the time and dates for activation/deactivation (*see Defining Automatically-Operated UOs and Arming Operations, page 61*). The installer can designate a label for each UO (the default is entitled "OUTPUT").

**NOTE:** Utility outputs can also be manually activated locally from keypads, or remotely via either SMS (see *Operating Remotely by SMS, page 29*).

## UO Operational Modes

When a UO appliance/device is activated, it operates in one of the following installer-configured modes:

- **Latched:** The appliance/device remains activated until it is deactivated.
- **Pulsed:** The appliance/device remains activated for a predefined time, after which it is automatically deactivated.

# Manually Operating Utility Outputs

**NOTES:**

- All UOs are installer-configured
- Proximity and keyfobs/remote controls can be used if installer-configured

| Device | Manual UO activation procedure: |
|---|---|
| | ❖ Press **Exit** button ➢ enter **code** and press **OK** ➢ scroll to **Activities menu** and press **OK** ➢ scroll to **Output Control** and press **OK** ➢scroll to relevant **UO number** and press **OK** ➢ press **OK** again to activate (or deactivate) the utility output.<br>❖ **Proximity activation/deactivation:** Place tag to activate the installer-defined UO. Place tag again to deactivate the UO.<br>**NOTE:** Proximity activation/deactivation is enabled only for tags that are specifically configured to operate a UO. A Tag that is configured to arm/disarm cannot operate the UO. |
| | ❖ **Quick mode:** Press **UO button (1,2, or 3)** for 2 seconds<br>❖ **High-Security mode:** Press **UO button (1,2, or 3)** for 2 seconds ➢ enter **code**<br>**NOTE:** You can activate from 1—3 UOs from the Slim keypad. |
| | ❖ **Quick mode:** Press * **UO button** for over 2 seconds. |

# Defining Automatically-Operated UOs and Arming Operations

The Grand Master can configure the following automated system operations according to schedules and other criteria that the Grand Master defines:

- **One-time system arming/disarming:** (For arming within the next 24 hours
- **Re-occurring weekly schedules:** Up to 64, for arming/disarming the system and/or activating/deactivating up to 4 UOs
- **Vacation schedules:** Up to 99, for UO activation and system arming

**NOTE:** When defining schedules for automatically-operated UOs or arming operations, you may find it handy to use the scheduling chart for listing the details (see *Appendix A: Scheduling Chart for Automatic UO & Arming Operations, page 75*).

## Defining a "One-Time" Schedule for Automatic Arming

➢ **To define a "one-time" system arming/disarming:**

1. At the keypad, enter your Grand Master code, and then press **OK**.
2. Scroll to **Clock** and then press **OK**.
3. Scroll to **Scheduler** and then press **OK**.
4. Scroll to **One Time** and then press **OK.**
5. Scroll to **Next Arm** and then press **OK.**
6. Select the partitions to arm. As the partitions are grouped in blocks of 10, scroll to the relevant block and then select the partition(s) by entering the respective partition numbers.
7. Press **OK,** and then enter the time for the arming to occur (within the next 24 hours); the keypad sounds a confirmation beep.
8. Scroll to **Next Disarm** and then press **OK.**
9. Select the partitions to disarm. As the partitions are grouped in blocks of 10, scroll to the relevant block and then select the partitions by entering the respective partition numbers.
10. Press **OK.**
11. You can now enter a disarming time; the keypad sounds a confirmation beep.

# Defining Weekly Schedules for Automatic Arming and UOs

You can define up to 64 re-occurring weekly schedules for **automatic UO activation/deactivation** and **automatic system arming/disarming.** Each schedule can have up to 2 separate start and stop time intervals per day. For an automatic arming/disarming, you can also set a "user limitation" safeguard to prevent the users you specify from disarming the system during the times you specify.

➢ **To define a weekly schedule:**

1. At the keypad, enter your Grand Master code, and then press **OK**.
2. Scroll to **Clock** and then press **OK**.
3. Scroll to **Scheduler** and then press **OK**.
4. Scroll to **Weekly** and then press **OK**.
5. Scroll to select the schedule number you are defining (**1—64**), then press **OK.**
6. Scroll to select from the following options for the selected schedule, then press **OK,** and then proceed to perform the respective configuration procedures in the tables below.
   - **1)ARM/DISARM**
   - **2)UO ("UO ON/OFF")**
   - **3)USER LIMIT**

   **NOTE:** When finished configuring an option, you can select and configure from the other options above.

## Configuring the Arm/Disarm Option

### Turning an Arming/Disarming Schedule On or Off

1. Scroll to **1)ON/OFF,** and then press **OK.**
2. Toggle to **ON** or **OFF** to turn the automatic arming schedule on or off respectively, and then press **OK.**

### Defining Partitions for the Arming/Disarming Schedule

1. Scroll to **2)PARTITION,** and then press **OK.**
2. Select partitions to arm/disarm. As the partitions are grouped in blocks of 10, scroll to the relevant block and then select the partitions by entering the respective partition numbers.
3. Press **OK.**

## Configuring the Arm/Disarm Option

### Selecting an Arming Mode for the Arming/Disarming Schedule

1. Scroll to **3)ARMING MODE,** and then press **OK.**
2. Scroll to an arming mode: **ARM** (full arming), **STAY** (partial arming), or **GROUP** (group arming), and then press **OK.**
3. **[For Group mode]:** Select the group letter(s) to automatically arm (each selected group displays as **Y**). To undo a selection, press the respective group letter again. Now press **OK.**
4. **[For all three modes]:** Select the day/time (required) and define a label for an arming/disarming schedule (optional) – see the following procedures:

### Setting the Day & Time for the Arming/Disarming Schedule

1. Scroll to **4)DAY/TIME,** and then press **OK.**
2. Scroll to a day to assign ARM and DISARM time periods – or scroll to **8)ALL** to assign those time periods to all days of the week, then press **OK.**

   **NOTE:** If you don't want to schedule time periods for any day(s), make sure the respective ARM/DISARM times are set to the defaults (00:00).
3. Enter the ARM time for the 1st time period, and then press **OK.**
4. Enter the DISARM time for the 1st time period, and then press **OK.**
5. Repeat the prior two steps for the 2nd time period if applicable**.**
6. Set ARM/DISARM time periods for other days of the week as needed.

### Defining a Label for the Arming/Disarming Schedule

1. Scroll to **5)LABEL,** and then press **OK.**
2. Enter a label (see *Creating or Editing Labels, page 19*), and then press **OK.**

### Turning the Inactivity Timer On or Off for the Arming/Disarming Schedule

If there is no detection from any of the zones in partitions with an automatic schedule (that has the Arm/Disarm option defined by the Grand Master with the Inactivity Timer set to ON), then those partitions will be automatically armed according to the (installer-set) Inactivity Timer parameter definition.

1. Scroll to **6)INACTIVE,** and then press **OK**.
2. Toggle to **ON** (to turn the Inactivity Timer on) or **OFF** (to turn it off), and then press **OK.**

## Configuring the UO Option

### Turning a UO Schedule On or Off

1. Scroll to **1)ON/OFF,** and then press **OK.**
2. Toggle to **ON** or **OFF** to turn the UO schedule on or off respectively, and then press **OK.**

### Defining the Utility Output(s) for the Schedule

1. Scroll to **2)UTIL OUTPUTS,** and then press **OK.**
2. Scroll through the utility outputs (up to 4 can be defined for the schedule), and for each toggle to either **Y** (to select) or **N** (to not select/remove).
3. Press **OK.**

### Setting the Day and Time for the UO Schedule

1. Scroll to **3)DAY/TIME,** and then press **OK.**
2. Scroll to a day to assign START and STOP time periods – or scroll to **8)ALL** to assign those time periods to all days of the week, and then press **OK.**

   **NOTE:** If you don't want to schedule time periods for any day(s), make sure the respective START/STOP times are set to the defaults (00:00).
3. Enter the START time for the 1st time period, and then press **OK.**
4. Enter the STOP time for the 1st time period, and then press **OK.**
5. Repeat the prior two steps for the 2nd time period if applicable**.**
6. Set START/STOP time periods for other days of the week as needed

### Defining a UO Schedule as a "Vacation" UO Schedule

See *Describing Vacation Schedules, page 65*.

1. Scroll to **4)VACATION,** and then press **OK.**
2. Toggle to **Y** (to set the schedule as a vacation schedule) or **N** (to not set it as a vacation schedule/remove a vacation schedule), and then press **OK.**
3. Now set the applicable dates (see *Setting Dates/Times and Activating a Vacation Schedule, page 66*)..

### Defining a Label for the UO Schedule

1. Scroll to **5)LABEL,** and then press **OK**.
2. Enter a label (see *Creating or Editing Labels, page 19*), and then press **OK**.

## Configuring the User Limitation Option

You can apply a "user limitation" mechanism to prevent selected users from disarming the system during 1 or 2 specified time intervals per day. By default users do not have a user limitation applied.

### Applying/Removing a User Limitation

1. Scroll to **3)USER LIMIT,** and then press **OK.**
2. Scroll to **1)ON/OFF** and then press **OK.**
3. Toggle to **ON** to apply a scheduled user limitation or **OFF** to remove a scheduled user limitation, and then press **OK.** Continue with the following steps only if you are applying a user limitation.
4. Scroll to **2)USERS NUMBER**, and then press **OK.**
5. Scroll through the users starting with Grand Master (or enter the user number) and for each user toggle to either **Y** (to apply a user limitation) or **N** (to not apply/remove an existing user limitation).
6. When finished configuring the users, press **OK.**
7. Press the **Exit button (** **),** then scroll to **3)DAY/TIME,** and then press **OK.**
8. Scroll to a day to assign the user limitation time periods – or scroll to **8)ALL** to assign those time periods to all days of the week, and then press **OK.**
   **NOTE:** If you don't want to schedule time periods for any day(s), make sure the respective START/STOP times are set to the defaults (00:00).
9. Enter the START time for the 1st time period, then press **OK.**
10. Enter the STOP time for the 1st time period, then press **OK.**
11. Repeat the prior two steps for the 2nd time period if applicable.
12. Set START/STOP time periods for other days of the week as needed.
13. Scroll to **4)Label,** and then press **OK.**
14. Enter a label (see *Creating or Editing Labels, page 19*), and then press **OK.**

## Describing Vacation Schedules

Define up to 99 different vacation schedules that are ready to activate when needed.
A vacation schedule is simply an additional schedule for **automatic UO activation/deactivation** or **automatic system arming/disarming** for which you assign vacation-specific criteria as needed, such as dates/times, and partitions.

The start vacation will arm the system and will only be disarmed at the end of the vacation schedule. An existing schedule defined to arm/disarm the same partition will not override the vacation schedule and, therefore, will not be activated before the end of the vacation schedule.

## Setting Dates/Times and Activating a Vacation Schedule

This procedure is for both UO vacation schedules and arming vacation schedules.

➢ **To set the date/time and activate an UO or arming vacation schedule:**

15. **[For a UO vacation schedule only]:** First perform the following procedure: *Defining a UO Schedule as a "Vacation" UO Schedule*
1. **[For a UO vacation schedule or arming vacation schedule]:** At the keypad, enter your Grand Master code, and then press **OK**.
2. Scroll to **Clock** and then press **OK**.
3. Scroll to **Vacation** and then press **OK.**
4. Scroll to **Dates** and then press **OK;** the first vacation schedule (01) appears first by default.
5. Press the **disarm button** for this vacation schedule (01), or scroll to another vacation schedule (from 01—99), and then press **OK.**
6. Enter a start time.
7. Scroll to the date field and enter a date (in a **day/month** format), and then scroll to the activation status **(Y** or **N)** and toggle to change it accordingly –Y activates the vacation schedule and N deactivates the vacation schedule.
8. **[For an arming vacation schedule only]:** If you are defining partitions, perform the following procedure now: *Defining Partitions for an Arming Vacation Schedule, page 66.*

## Defining Partitions for an Arming Vacation Schedule

You can define up to 32 partitions for an arming vacation schedule.

➢ **To define partitions for an arming vacation schedule:**

1. Directly after you performed the prior procedure, press the **Exit button,** then scroll to **Partitions,** and then press **OK.**
2. The 32 partitions are grouped in blocks of 10. Scroll to the relevant block and then select the partition(s) by entering the respective partition number(s). To delete a previously selected partition, re-enter the partition number.
3. Press **OK.**

# Using Macros

System users can activate macros, which are custom commands for controlling and operating the system. Up to four macros (A, B, C, D) can be recorded (programmed) locally using any RISCO keypad except Slim models.

## Recording Macros

➢ **To record a macro:**

1. At the keypad, enter your Grand Master code, and then press **OK**.
2. Scroll to **Macro** and then press **OK.**
3. Scroll to select one of the available (not-yet recorded) macro options -- **A, B, C,** or **D,** and then press **OK.**
4. Press the macro option you selected in the prior step (A, B, C, or D) for 5 seconds to start the recording sequence.
5. Enter a sequence of characters according to the following table:

| Character | Represents the following |
|---|---|
| **0--9** | Numerical buttons from 0—9 |
| **A, B, C, D** | Macro keys A, B, C, and D |
| ***** | Exit button |
| # | OK button |
| **a, b, c, d** | Groups A, B, C, and D |
| **r** | Full ("away") arming button |
| **s** | Partial ("stay" or "home") arming button |

6. After you finished entering the series of characters, scroll so that the cursor is located **after** the last character in the series, and then press the macro option you had selected in step 3; the macro is saved.

## Activating Macros

➢ **To activate a pre-recorded macro:**

- On the keypad, press the macro option **(A—D)** for 2 seconds to activate the respective macro.

# Performing Maintenance Tasks

## Defining the Time and Date Manually

For systems connected to the Cloud, the time and date are updated automatically, however, regardless whether your system is Cloud-connected or not, the time and date can be manually set as needed.

➢ **To manually define the time and date:**

1. At the keypad, enter your Grand Master code, and then press **OK.**
2. Scroll to **Clock,** and then press **OK.**
3. At **Time & Date** press **OK.**
4. Using the scroll keys to move the cursor, enter the time and date in the format as shown on the keypad display. When finished, press **OK.**

## Replacing Detector & Accessory Batteries in Service Mode

Activating **Service mode** silences all tamper alarms from detectors and accessories for an installer-defined period of time, which enables you to replace wireless detector and accessory batteries without the tamper alarms sounding.

➢ **To activate and deactivate Service mode:**

1. At the keypad, enter your Grand Master code, and then press **OK.**
2. At **Activities** press **OK.**
3. Scroll to **Advanced,** and then press **OK**.
4. Scroll to **Service Mode,** and then press **OK;** a confirmation beep sounds and SERVICE MODE ACTIVATED displays.
5. Proceed to replace detector/accessory batteries as required.
6. When you've finished replacing batteries, press **OK** to deactivate Service mode.

   **NOTE:** If the keypad has timed out (after 90 seconds – when SERVICE MODE and the time/date display), in order to deactivate Service mode first press **Exit**, and then repeat **steps 1—4** in this procedure; a confirmation beep sounds and SERVICE MODE DEACTIVATED displays.

   **NOTE:** After the Service mode time period expires, if you did not yet exit the mode, the system will automatically exit and any open detectors/accessories may trigger tamper alarms.

# Performing SIM Card Maintenance

## Checking the SIM Credit Level

Receive information on the available credit level of the prepaid SIM card via SMS (installer-configured).

➢ **To check the SIM credit level:**

1. At the keypad, enter your Grand Master code, and then press **OK.**
2. At **Activities** press **OK.**
3. Scroll to **Prepaid SIM,** and then press **OK**.
4. Scroll to **Check Credit,** and then press **OK;** SENDING MESSAGE appears as the system communicates to the service provider, and you will receive notification of the SIM credit status accordingly (via SMS).

## Resetting the SIM Card

After replenishing the SIM card's credit level, it must be manually reset.

➢ **To reset the SIM card:**

1. At the keypad, enter your Grand Master code, and then press **OK.**
2. At **Activities** press **OK.**
3. Scroll to **Prepaid SIM,** and then press **OK**.
4. Scroll to **Reset SIM,** and then press **OK.**
5. Press **OK** again; RESET SIM CARD COUNTER appears to inform of the reset.

# Enabling / Disabling Keypad Sounds

At the keypad, you can turn the following sounds on or off:

- **Keypad chime** [for the internal chime of the current keypad]: Turn the chime **ON** or **OFF** for all functions that have the chime feature.
- **Partition chime** [for the internal chime of all keypads in the partitions]: Turn all the chimes **ON or OFF** for all functions that have the chime feature.
- **Buzzer** [for the internal buzzer of the current keypad]: Turn the buzzer **ON** or **OFF** – used Entry & Exit Delay time periods, and for fire and intrusion alarms.

## Enabling / Disabling the Current Keypad's Chime

➢ **To enable/disable the internal chime of the currently-used keypad:**

1. At the keypad, enter your Grand Master or user code, and then press **OK.**
2. At Activities press OK.
3. Scroll to **Keypad Sound,** and then press **OK.**
4. At **Chime** press **OK.**
5. Scroll to **Keypad Chime** and then press **OK.**
6. Scroll to **Chime ON** or **Chime OFF,** then press **OK;** LOCAL CHIME ON (or OFF) displays.

## Enabling / Disabling All Keypad Chimes

➢ **To enable/disable the internal chime of all keypads in all partitions:**

1. At the keypad, enter your Grand Master or user code, and then press **OK.**
2. At **Activities** press **OK.**
3. Scroll to **Keypad Sound,** and then press **OK.**
4. At **Chime** press **OK.**
5. Scroll to **Partition Chime** and then press **OK.**
6. Scroll to **Chime ON** or **Chime OFF**, then press **OK;** GLOBAL CHIME ON (or OFF) displays.

## Enabling / Disabling the Current Keypad's Buzzer

➢ **To enable/disable the internal buzzer of the currently-used keypad:**

1. At the keypad, enter your Grand Master or user code, and then press **OK**.
2. At Activities press **OK**.
3. Scroll to **Keypad Sound,** and then press **OK**.
4. At **Chime,** scroll to **Buzzer On/Off,** and then press **OK.**
5. Scroll to **Buzzer ON** or **Buzzer OFF,** then press **OK;** LOCAL BUZZER ON (or OFF) displays.

## Terminating Follow-Me Notifications

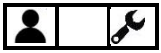

You can terminate the transmission of FM notifications to the recipients – for example, for a false alarm, where you don't want the recipients to get notified.

➢ **To terminate Follow Me notifications:**

1. At the keypad, enter your Grand Master code, and then press **OK.**
2. Scroll to **Follow Me** and then press **OK.**
3. Scroll to **Terminate FM** and then press **OK; notification** transmissions to all remaining FM destinations are stopped.

## Cancelling Monitoring Station Notification upon Installer Programming

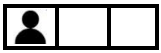

If the system is configured to require the Grand Master to notify the monitoring station when a installer/technician configures programs the system (for any time after initial system setup and programming), the Grand Master can select **Void Report Programming** to cancel sending the notification report to the monitoring station, and still allow the installer to program the system. The installer will then have 5 minutes to gain access to the installer Programming menu.

➢ **To allow installer programming without monitoring station notification:**

1. At the keypad, enter your Grand Master code, and then press **OK.**
2. At **Activities** press **OK.**
3. Scroll to **Advanced…**, and then press **OK.**
4. Scroll to **Void Report Programming,** and then press **OK;** the installer has 5 minutes to gain access to the Programming menu.

# Testing the System

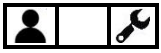

The following tests are recommended to be performed at system installation, and subsequently, as needed. Ask your installer if they have already been performed during the system installation.

## Performing a Walk Test

A walk test checks the detection ability of all detectors (PIR and Magnetic Contact detectors) in all zones, to ensure correct operation. Test results are displayed on the keypad. A walk test can be a relatively a quick procedure, depending on the scope of the installation and premises, however if needed, up to 60 minutes is allotted for the test. The following walk tests can be performed:

- **Full Walk Test:** This test displays the activated zones (the zones where all detections occurred) and the types of detection.
- **Quick Walk Test:** This test displays the non-activated or open ("not-ready") zones (the zones where detections didn't occur).

**NOTES:**

- Both full and quick walk tests must be performed with the system unarmed.
- A walk test cannot be performed using a Slim keypad

➢ **To perform a full or quick walk test:**

1. Ensure the system is unarmed.
2. At the keypad, enter your Grand Master code, and then press **OK.**
3. Scroll to **Maintenance** and then press **OK.**
4. Scroll to **Walk Test** and then press **OK.**
5. Scroll to either **Full Walk Test** or **Quick Walk Test,** and then press **OK;** MAKE WALK TEST AND HIT ANY KEY display.
6. During the allotted time period of 60 minutes, walk through all the zones in order to trigger activations from all the detectors in those zones.

   **NOTE:** During the last five minutes of the time period, the keypad used to initiate the test will indicate that the time period is about to end.
7. When you have finished walking through the zones, press any key on the keypad to end the test; the results display on the keypad.

## Testing MS Communication

This tests the communication between the system and the monitoring station(s). See *Step 8: Performing a Monitoring Station Test, page 26*.

## Testing Follow-Me Destinations

This tests if notifications sent to Follow-Me destinations (recipients) are received. It is highly recommended to test every FM destination.

➢ **To test a FM destination:**

1. At the keypad, enter your Grand Master code, and then press **OK.**
2. Scroll to **Follow Me** and then press **OK.**
3. Scroll to **Test FM** and then and press **OK.**
4. Scroll to select a FM destination to test, and then press **OK;** FM TEST ACTIVATED displays and a test message is sent to the selected FM destination.

## Performing a Keypad Test

This tests a keypad's indicators.

**NOTE:** This test is not relevant for the Slim keypad.

➢ **To perform a keypad test:**

1. At the keypad, enter your Grand Master code, and then press **OK.**
2. Scroll to **Maintenance** and then press **OK.**
3. Scroll to **Keypad Test** and then press **OK;** all the keypad's indicators display for a few seconds.

## Performing a Siren Test

This tests a siren's' sounding mechanism.

➢ **To perform a siren test:**

1. At the keypad, enter your Grand Master code, and then press **OK.**
2. Scroll to **Maintenance** and then press **OK.**
3. Scroll to **Siren Test** and then select the siren to test.
4. Press **OK;** the siren sounds.
5. Press **Exit** to end the siren test.

## Performing a Strobe Test

This tests a siren's strobe light.

➢ **To perform a strobe test:**

1. At the keypad, enter your Grand Master code, and then press **OK.**
2. Scroll to **Maintenance** and then press **OK.**
3. Scroll to **Strobe Test** and then select the strobe to test.
4. Press **OK;** the strobe activates.
5. Press **Exit** to end the strobe test.

# Appendix A: Scheduling Chart for Automatic UO & Arming Operations

You can use this chart (optional) to list the details of an automatic UO or arming schedule – it can be used for reoccurring weekly schedules, or weekly vacation schedules.

**Schedule name / number:** _____

**Reoccurring weekly schedule:** ☐ **Vacation schedule:** ☐

| Schedule Type | Details | | | |
|---|---|---|---|---|
| **Arm / Disarm** ☐ | **Partition(s)** _____ | | | |
| | **Arming Mode:**<br>☐ Full<br>☐ Partial<br>☐ Group | **Group:**<br>☐ A ☐ B ☐ C ☐ D | | |
| **Utility Output** ☐ | **UO number(s):**_____ | | | |
| | **Note:** Up to 99 different vacation schedules can be defined. | | | |
| **User Limitation** ☐ | **User Number** | **Name** | **User Number** | **Name** |
| | | | | |
| | | | | |
| | | | | |
| | **Note:** Default is without user limitation applied. | | | |

| Day | Start Time 1 HH:MM | Stop Time 1 HH:MM | Start Time 2 HH:MM | Stop Time 2 HH:MM |
|---|---|---|---|---|
| Sunday | | | | |
| Monday | | | | |
| Tuesday | | | | |
| Wednesday | | | | |
| Thursday | | | | |
| Friday | | | | |
| Saturday | | | | |

# Appendix B: User Menu Maps

The following user menus and respective options will display according to the system installation, as well as the authority level of the user.

| User menu | Menu options and respective settings |
|---|---|
| **Activities** | ○ **Bypass** ➢ Zones ➢ One Time Only, Bypass Reset, Bypass Recall, Permanent Bypass<br>○ **Output control** ➢ Output 001<br>○ **Keypad sound** ➢ Chime, Buzzer ON/OFF<br>○ **Config SW** ➢ CS Connect<br>○ **Prepaid SIM** ➢ Check credit, Reset SIM<br>○ **WiFi** ➢ WiFi Scan, WiFi WPS Button<br>○ **Advanced** ➢ Switch AUX, Void Rep. Prog., Service mode. MS Test |
| **Follow Me** | ○ **Define** ➢ FM number ➢ Report Type, Partition, Events, Restore Event, Remote Control, Label<br>○ **Test FM**<br>○ **Terminate FM** |
| **View** | ○ **Trouble** ➢ (view troubles)<br>○ **Alarm Memory**<br>○ **Partition Status**<br>○ **Zone Status**<br>○ **Service Info** ➢ Installer, System version, Serial number, Panel ID<br>○ **View IP Address**<br>○ **Cloud Status**<br>○ **WiFi Status** |
| **Codes/Tags** | ○ **Define** ➢ GM, user, ➢ Edit code, Authority, Partition, (Re)Write Tag, Delete Tag, Edit Label<br>○ **Delete By Tag** |
| **Clock** | ○ **Time & Date**<br>○ **Scheduler** ➢ Weekly, One Time<br>○ **Vacation** ➢ Partitions, Dates |
| **Event Log** | ○<br>○ **Security Log**<br>○ **AC Event Log** |
| **Maintenance** | ○ **Walk test** ➢ Full Walk Test, Quick Walk Test<br>○ **Keypad test**<br>○ **Siren test**<br>○ **Strobe test** |
| **Macro** | ○ **Macro** ➢ A, B, C, D |

# Appendix C: System Indicators

Various audible (sound) indicators and visual (viewed) indicators are available, depending on the system configuration.

## Sound Indicators

Sound indications are available for system status, operations and events:

- **Beeps and squawks**

Sound indicators are requested / initiated from keypads and remote controls, and the sounds can be heard from the keypads, remote controls and external sirens.

### "Beep" and "Squawk" Sound Indicators

The following table below shows the "beep" and "squawk" sound indications that are heard when requested / initiated from keypads, remote controls and keyfobs:

| Requested / initiated from: 8-button remote control | | |
|---|---|---|
| **Operation / event** | **Sounds from remote control** | **Sounds from siren** |
| **Confirmation** | 1 beep | No sound |
| **Error** | 3 beeps | No sound |
| **Alarm** | 5 beeps | No sound |
| **Arming / disarming** | 1 beep | Armed = 1 squawk<br>Disarmed = 2 squawks (or 4 if disarmed after an alarm) |

| Requested / initiated from: 4-button keyfob | | |
|---|---|---|
| **Operation** | **Sounds from keyfob** | **Sounds from siren** |
| **Arming / disarming** | No sound | Armed = 1 squawk<br>Disarmed = 2 squawks (or 4 if disarmed after an alarm) |

| Requested / initiated from: Slim keypad | | |
|---|---|---|
| **Operation / event** | **Sounds from keypad** | **Sounds from siren** |
| **Confirmation** | 1 long beep | No sound |
| **Wrong code** | 3 short beeps | No sound |
| **Entry/exit beeps** | Slow repeating beeps until end of delay period (2) Fast beeps at end of delay period. | No sound |
| **Each key press** | 1 short beep | No sound |

| Requested / initiated from: Slim keypad | | |
|---|---|---|
| **Arming / disarming** | 1 long beep | Armed = 1 squawk<br>Disarmed = 2 squawks (or 4 if disarmed after an alarm) |

| Requested / initiated from Panda keypad | | |
|---|---|---|
| **Operation / event** | **Sounds from keypad** | **Sounds from siren** |
| **Intrusion alarm** | Fast beeping | Siren sound (fast beeping) |
| **Fire alarm** | Fast beeping | Repeated sequence of 2 siren beeps followed by short interval |
| **Duress Disarming alarm** | No sound (1) | No sound (1) |
| **Emergency alarm** | A single beep | No sound |
| **Arming / disarming** | Long "confirmation" beep (can be installer-configured to be without sound). | Armed = 1 squawk<br>Disarmed = 2 squawks (or 4 if disarmed after an alarm) |
| **Confirm operation** | Long "confirmation" beep | No sound |
| **Reject command / incorrect operation** | 3 fast beeps (2,3) | No sound |
| **Chime sound** | Long beep (4) | None |
| **Entry Delay countdown** | Slow repeating beeps until end of delay period (2) Fast beeps at end of delay period. | No sound (unless installer-configured) |
| **Exit Delay countdown** | Slow repeating beeps until end of delay period (2) Fast beeps at end of delay period. | No sound (unless installer-configured) |

**Footnotes:**

1. As defined by the installer, during system installation.
2. Keypad beeps may be enabled/disabled by user (see *Enabling / Disabling Keypad Sounds, page 69*).
3. Press the OK button on the keypad for two seconds to stop fault beeps
4. As defined by the installer, for any intrusion zone violated when the system is disarmed. It can be disabled when not required.

# Viewed Indicators

Requested/initiated from the keypads and remote controls, the following viewed indicators are provided for system status, operations and events:

- **Texts and messages** on keypad displays
- **Icon status indicators** on keypad displays
- **LED status indicators** on keypads and 8-button remote controls

For the procedures to view system status, see *Obtaining System Information, page 31*.

## Keypad Indicators

**NOTE:** For keypad display options, see *Keypad Display Options, page 30*.

| Slim Keypad Indicators | | | |
|---|---|---|---|
| **LED Indicators** | **LED Color** | **State** | **Status** |
| 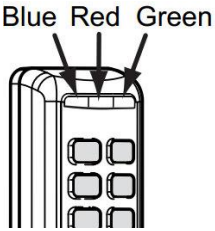 | Blue | Blinking | Keypad is communicating with the panel |
| | Red | On | System is fully or partially armed |
| | | Slow flashing | During an exit delay |
| | | Rapid flashing | During an alarm |
| | Green | Blinking | Trouble indication is in the system while the system is disarmed |
| | Green/Red | Toggling | Waiting for code to be entered |

| Panda Keypad Indicators | | |
|---|---|---|
| **TROUBLE**<br><br>**On:** System Trouble<br>**Off:** System operating normally | **READY**<br><br>**On:** Ready to arm<br>**Off:** Not ready to arm<br>**Slow flash:** System is ready to be armed while exit/entry zone is open | **ARM**<br><br>**On:** System is armed in Full Arm or Stay Arm mode<br>**Off:** System disarmed<br>**Slow flash:** System in Exit Delay<br>**Rapid flash:** Alarm |
| **PARTIAL (STAY) ARM / BYPASS**<br><br>**On:** System is Stay Arm mode (Part Set) or Zone Bypass mode<br>**Off:** No bypassed zones | **TAMPER**<br><br>**On:** Zone / keypad / external module has been tampered<br>**Off:** All zones are operating normally | **CLOUD CONNECTIVITY**<br><br>**On:** System connected to cloud<br>**Off:** No cloud connection configured / No cloud connectivity<br>**Slow flash:** Cloud connectivity trouble |

| 4-Button Panda Keyfob Indicators | | |
|---|---|---|
| Operation | LED for Send Commands | LED for Receive Status |
| Full Arming | Green* | Red |
| Partial Arming | Green* | Orange |
| Disarming | Green* | Green |
| Alarm | Green* | Flashing LED |
| UO activation | Green* | Blinks according to panel status |
| * If the LED changes to orange, it indicates the remote control battery is low. | | |

## UKCA and CE RED Compliance Statement

Hereby, RISCO Group declares that this equipment is in compliance with the essential requirements of the UKCA Radio Equipment Regulations 2017 and CE Directive 2014/53/EU.

For the UKCA and CE Declaration of Conformity please refer to our website www.riscogroup.com

# Standard Limited Product Warranty

RISCO Ltd., its subsidiaries and affiliates (“RISCO") guarantee RISCO’s hardware products to be free from defects in materials and workmanship when used and stored under normal conditions and in accordance with the instructions for use supplied by RISCO, for a period of (i) 24 months from the date of connection to the RISCO Cloud (for cloud connected products) or (ii) 24 months from production (for other products which are non-cloud connected), as the case may be (each, the “Product Warranty Period” respectively).

Contact with customers only. This Product Warranty is solely for the benefit of the customer who purchased the product directly from RISCO, or from any authorized distributor of RISCO. Nothing in this Warranty obligates RISCO to accept product returns directly from end users that purchased the products for their own use from RISCO’s customer or from any installer of RISCO, or otherwise provide warranty or other services to any such end user. RISCO customer shall handle all interactions with its end users in connection with the Warranty, inter alia regarding the Warranty. RISCO’s customer shall make no warranties, representations, guarantees or statements to its customers or other third parties that suggest that RISCO has any warranty or service obligation to, or any contractual privy with, any recipient of a product.

Return Material Authorization. In the event that a material defect in a product shall be discovered and reported during the Product Warranty Period, RISCO shall, at its option, and at customer's expense, either: (i) accept return of the defective Product and repair or have repaired the defective Product, or (ii) accept return of the defective Product and provide a replacement product to the customer. The customer must obtain a Return Material Authorization (“RMA”) number from RISCO prior to returning any Product to RISCO. The returned product must be accompanied with a detailed description of the defect discovered (“Defect Description”) and must otherwise follow RISCO’s then-current RMA procedure in connection with any such return. If RISCO determines in its reasonable discretion that any Product returned by customer conforms to the applicable warranty (“Non-Defective Products”), RISCO will notify the customer of such determination and will return the applicable Product to customer at customer’s expense. In addition, RISCO may propose and assess customer a charge for testing and examination of Non-Defective Products. Entire Liability. The repair or replacement of products in accordance with this warranty shall be RISCO’s entire liability and customer’s sole and exclusive remedy in case a material defect in a product shall be discovered and reported as required herein. RISCO’s obligation and the Warranty are contingent upon the full payment by customer for such Product and upon a proven weekly testing and examination of the product functionality.

Limitations. The Product Warranty is the only warranty made by RISCO with respect to the Products. The warranty is not transferable to any third party. To the maximum extent permitted by applicable law, the Product Warranty does not apply and will be void if: (i) the conditions set forth above are not met (including, but not limited to, full payment by customer for the product and a proven weekly testing and examination of the product functionality); (ii) if the Products or any part or component thereof: (a) have been subjected to improper operation or installation; (b) have been subject to neglect, abuse, willful damage, abnormal working conditions, failure to follow RISCO’s instructions (whether oral or in writing); (c) have been misused, altered, modified or repaired without RISCO’s written approval or combined with, or installed on products, or equipment of the customer or of any third party; (d) have been damaged by any factor beyond RISCO’s reasonable control such as, but not limited to, power failure, electric power surges, or unsuitable third party components and the interaction of software therewith or (e) any delay or other failure in performance of the product attributable to any means of communications, provided by any third party service provider (including, but not limited to) GSM interruptions, lack of or internet outage and/or telephony failure.

BATTERIES ARE EXPLICITLY EXCLUDED FROM THE WARRANTY AND RISCO SHALL NOT BE HELD RESPONSIBLE OR LIABLE IN RELATION THERETO, AND THE ONLY WARRANTY APPLICABLE THERETO, IF ANY, IS THE BATTERY MANUFACTURER'S WARRANTY.

RISCO makes no other warranty, expressed or implied, and makes no warranty of merchantability or of fitness for any particular purpose. For the sake of good order and avoidance of any doubt:

DISCLAIMER. EXCEPT FOR THE WARRANTIES SET FORTH HEREIN, RISCO AND ITS LICENSORS HEREBY DISCLAIM ALL EXPRESS, IMPLIED OR STATUTORY, REPRESENTATIONS, WARRANTIES, GUARANTEES, AND CONDITIONS WITH REGARD TO THE PRODUCTS, INCLUDING BUT NOT LIMITED TO ANY REPRESENTATIONS, WARRANTIES, GUARANTEES, AND CONDITIONS OF MERCHANTABILITY, FITNESS FOR A PARTICULAR PURPOSE, TITLE AND LOSS OF DATA. WITHOUT LIMITING THE GENERALITY OF THE FOREGOING, RISCO AND ITS LICENSORS DO NOT REPRESENT OR WARRANT THAT: (I) THE OPERATION OR USE OF THE PRODUCT WILL BE TIMELY, SECURE, UNINTERRUPTED OR ERROR-FREE; (ii) THAT ANY FILES, CONTENT OR INFORMATION OF ANY KIND THAT MAY BE ACCESSED THROUGH THE PRODUCT BY CUSTOMER OR END USER SHALL REMAIN SECURED OR NON DAMAGED. CUSTOMER ACKNOWLEDGES THAT NEITHER RISCO NOR ITS LICENSORS CONTROL THE TRANSFER OF DATA OVER COMMUNICATIONS FACILITIES, INCLUDING THE INTERNET, GSM OR OTHER MEANS OF COMMUNICATIONS AND THAT RISCO'S PRODUCTS, MAY BE SUBJECT TO LIMITATIONS, DELAYS, AND OTHER PROBLEMS INHERENT IN THE USE OF SUCH MEANS OF COMMUNICATIONS. RISCO IS NOT RESPONSIBLE FOR ANY DELAYS, DELIVERY FAILURES, OR OTHER DAMAGE RESULTING FROM SUCH PROBLEMS.

RISCO WARRANTS THAT ITS PRODUCTS DO NOT, TO THE BEST OF ITS KNOWLEDGE, INFRINGE UPON ANY PATENT, COPYRIGHT, TRADEMARK, TRADE SECRET OR OTHER INTELLECTUAL PROPERTY RIGHT

IN ANY EVENT RISCO SHALL NOT BE LIABLE FOR ANY AMOUNTS REPRESENTING LOST REVENUES OR PROFITS, PUNITIVE DAMAGES, OR FOR ANY OTHER INDIRECT, SPECIAL, INCIDENTAL, OR CONSEQUENTIAL DAMAGES, EVEN IF THEY WERE FORESEEABLE OR RISCO HAS BEEN INFORMED OF THEIR POTENTIAL.

RISCO does not install or integrate the product in the end user security system and is therefore not responsible for and cannot guarantee the performance of the end user security system which uses the product.

RISCO does not guarantee that the product will prevent any personal injury or property loss by burglary, robbery, fire or otherwise; or that the product will in all cases provide adequate warning or protection.

Customer understands that a correctly installed and maintained alarm may only reduce the risk of burglary, robbery or fire without warning, but is not an assurance or a guarantee that such an event will not occur or that there will be no personal injury or property loss as a result thereof. Consequently RISCO shall have no liability for any personal injury, property damage or loss based on a claim that the product fails to give warning.

No employee or representative of RISCO is authorized to change this warranty in any way or grant any other warranty.

# Contacting RISCO Group

RISCO Group is committed to customer service and product support. You can contact us through our website **(www.riscogroup.com)** or at the following RISCO branches:


**Belgium (Benelux)**
Tel: +32-2522-7622
support-be@riscogroup.com

**China (Shanghai)**
Tel: +86-21-52-39-0066
support-cn@riscogroup.com

**France**
Tel: +33-164-73-28-50
support-fr@riscogroup.com

**Israel**
Tel: +972-3-963-7777
support@riscogroup.com

**Italy**
Tel: +39-02-66590054
support-it@riscogroup.com

**Spain**
Tel: +34-91-490-2133
support-es@riscogroup.com

**United Kingdom**
Tel: +44-(0)-161-655-5500
support-uk@riscogroup.com


This RISCO product was purchased from:

© RISCO Group. All rights reserved. 2023