Network Dome

QNV-C6083R

2MP AI IR Vandal Dome Camera

Key Features

- Max. 2MP resolution
- 3.2~10.2mm(3.2x) motorized varifocal
- Color: 0.04Lux (F1.6, 1/30sec),
BW: 0.004Lux (F1.6, 1/30sec, 30IRE)
- Maximum 30fps@2MP (H.265/H.264)
- IR viewable length 40m(131.23ft)
- Day & Night (ICR), WDR (120dB), WiseNR II (Using AI engine)
- Hard-coated dome bubble
- H.265, H.264, MJPEG, WiseStreamIII (Using AI engine)
- Analytics events based on AI engine (NPU) : Object detection
(Person/Vehicle - car, truck, bus, bicycle, motorcycle),
Motion detection, Virtual line(Crossing/Direction),
Virtual area(Loitering/Intrusion/Enter/Exit)
- IP66, IK10
- PoE: Max 9.8W
- HDMI Video out: 1080p@30/25fps (60/50Hz)
- HDMI out is supported through an optional cable (SPP-C1900)

Design and specifications are subject to change without notice. The latest product information / specification can be found at HanwhaVision.com.
Hanwha Vision is formerly known as Hanwha Techwin.

© Hanwha Vision CO., LTD. All rights reserved.

QNV-C6083R

2MP AI IR Vandal Dome Camera

Specifications

Video	
Imaging Device	1/2.8" CMOS
Resolution	1920x1080, 1280x1024, 1280x960, 1280x720, 1024x768, 800x600, 800x448, 720x576, 720x480, 640x480, 640x360, 320x240
Max. Framerate	H.265/H.264: Max. 30fps/25fps(60Hz/50Hz) (WDR on/off) MJPEG: Max. 30fps(@2MP Max. 5fps)
Min. Illumination	Color: 0.04Lux (F1.6, 1/30sec) BW: 0.004Lux (F1.6, 1/30sec, 30IRE), 0Lux(IR LED on)
Video Out	USB: Micro USB Type B, 1280x720 for installation HDMI: 1080p@30/25fps (60/50Hz) * HDMI out is supported through an optional cable(SPP-C1900)

Lens	
Focal Length (Zoom Ratio)	3.2~10.2mm(3.2x) motorized varifocal
Optical Zoom	3.2x
Max. Aperture Ratio	F1.6(Wide)~F3.1(Tele)
Angular Field of View	H: 102°(Wide)~32°(Tele) V: 55°(Wide)~18°(Tele) D: 119°(Wide)~36°(Tele)
Min. Object Distance	1.2m (3.93ft)
Focus Control	Simple focus
Lens Type	DC auto iris(IR corrected)

Pan / Tilt / Rotate	
Pan / Tilt / Rotate Range	0°~350° / -35°~70° / 0°~355°

Operational	
Camera Title	Displayed up to 85 characters
Day & Night	Auto(ICR)
Backlight Compensation	BLC, WDR, SSDR
Wide Dynamic Range	120dB
Digital Noise Reduction	WiseNR II (Based on AI engine) SSNR V
Motion Detection	8ea, 8point polygonal zones
Privacy Masking	32ea, 4point quadrangle zones - Color: Gray/Green/Red/Blue/Black/White
Gain Control	Low / Middle / High
White Balance	ATW / AWC / Manual / Indoor / Outdoor
LDC	Support
Electronic Shutter Speed	Minimum / Maximum / Anti flicker (1/5~1/25,000sec) prefer shutter control
Video Rotation	Flip, Mirror, Hallway view(90°/270°)

Design and specifications are subject to change without notice. The latest product information / specification can be found at HanwhaVision.com.
Hanwha Vision is formerly known as Hanwha Techwin.

© Hanwha Vision CO., LTD. All rights reserved.

Analytics	Classified object type: Person/Vehicle Attributes: Vehicle(Type:car/bus/truck/motorcycle/bicycle) Support DetectionShot Analytics events based on AI engine - Motion detection*, Object detection, Virtual line*(Crossing/Direction), Virtual area*(Loitering/Intrusion/Enter/Exit) Analytics events - Defocus detection, Tampering, Virtual area(Appear/Disappear) * Some of the video analytics only works with people and vehicle detection
Business Intelligence	Based on AI engine: People counting, Vehicle counting, Queue management, Heatmap
Alarm I/O	Input 1ea / Output 1ea * Alarm I/O is supported through an optional cable(SPP-C7400)
Alarm Triggers	Analytics, Network disconnect, Alarm input, MQTT subscription
Alarm Events	When alarm trigger occurred - File upload(image) : e-mail/FTP - Notification : e-mail - Recording : SD/SDHC/SDXC or NAS recording at event triggers - Alarm output - Handover(PTZ preset, Send message by HTTP/HTTPS/TCP) - Audio clip playback - MQTT: publication
Audio In	Selectable(mic in/line in) * Audio In is supported through an optional cable(SPP-C7400)
Audio Out	Line out * Audio Out is supported through an optional cable(SPP-C7400)
Light Type	IR LED (850nm)
IR Viewable Length	40m(131.23ft)
IR Wavelength	long-life 850nm IR LED

Network	
Ethernet	RJ-45(10/100BASE-T)
Video Compression	H.265/H.264: Main/High, MJPEG
Audio Compression	G.711 u-law /G.726 Selectable G.726(ADPCM) 8KHz, G.711 8KHz G.726: 16Kbps, 24Kbps, 32Kbps, 40Kbps AAC-LC: 48Kbps at 16KHz
Smart Codec	Manual(5ea area), WiseStreamIII
Bitrate Control	H.264/H.265: CBR or VBR MJPEG: VBR
Streaming	Unicast(20 users) / Multicast Multiple streaming(Up to 5 profiles)
Protocol	IPv4, IPv6, TCP/IP, UDP/IP, RTP(UDP), RTP(TCP), RTCP, RTSP, NTP, HTTP, HTTPS, SSL/TLS, DHCP, FTP, SMTP, ICMP, IGMP, SNMPv1/v2c/v3(MIB-2), ARP, DNS, DDNS, QoS, UPnP, Bonjour, LLDP, CDP, SRTP(TCP, UDP Unicast), MQTT
Application Programming Interface	ONVIF Profile S/G/T/M SUNAPI(HTTP API) Hanwha Vision Open Platform

Security	
OS / Firmware Protect	Encrypted firmware, Secure boot, Signed firmware
User authentication	Digest Authentication, Prevent brute-force attack
Network authentication	IEEE 802.1X(EAP-TLS, EAP-LEAP, EAP-PEAP, MSCHAPv2)
Secure Communication	HTTPS, WSS(WebSocket Secure)
Access Control	IP-based access control
Data Protect	Encryption credentials, Encrypt compress for live recording file
Audit	Access / System / Event Log management
Device ID	Device certificate(Hanwha Vision Root CA)
Secure Storage	SDcard partition encrypt

Design and specifications are subject to change without notice. The latest product information / specification can be found at HanwhaVision.com.
Hanwha Vision is formerly known as Hanwha Techwin.

© Hanwha Vision CO., LTD. All rights reserved.

Security Certificate	Secure by default

General	
Webpage Language	English, Korean, Chinese, French, Italian, Spanish, German, Japanese, Russian, Portuguese, Czech, Polish, Turkish, Dutch, Hungarian, Greek
Edge Storage	Micro SD/SDHC/SDXC 1slot 256GB
Memory	2GB RAM, 1GB Flash

Environmental & Electrical	
Operating Temperature / Humidity	-40°C~+55°C(-40°F~+131°F) / 0~100% RH Humidity control /w Air vent
Storage Temperature / Humidity	-50°C ~ +60°C(-58°F ~ +140°F) / Less than 95% RH
Certification	IP66, IK10
Input Voltage	PoE(IEEE802.3af, Class3)
Power Consumption	PoE: Max 9.8W, typical 4.0W

Mechanical	
Color / Material	White / Aluminum Bubble : Hard-coated dome
RAL Code	RAL9003
Product Dimensions / Weight	ø140x110.2mm(ø5.51x4.34"), 850g(1.87 lb)
Compatible Conduit hole / Gangbox	Conduit hole : None Gangbox : Single, Double, 4" Octagon

Certifications & Standards	
EMC	FCC 47 CFR 15 Subpart B Class A ICES-3(A)/NMB-3(A) CE/UKCA - EN 55032 Class A, EN 50130-4, EN 61000-3-2, EN 61000-3-3 VCCI CISPR 32 Class A RCM AS/NZS CISPR 32 Class A
Safety	UL 62368-1, CAN/CSA C22.2 NO. 62368-1 IEC/EN 62471
Environment	IEC/EN 63000 IEC/EN 60529 IP66, IEC/EN 62262 IK10

Compatible Models	
Hanging Adaptor	SBP-140HMW
Back Box	SBV-140BW, SBV-140WW
Ceiling Mount (Assy)	SBP-150CMI, SBP-300CMI, SBP-300CMW1, SBP-900CMW, SBP-300CMTW, SBP-300CMTS
Ceiling Mount (Single Unit)	SBP-140CMB, SBP-140CMT, SBP-180CMB, SBP-180CMS, SBP-150CMP, SBP-300CMP, SBP-900CMP, SBP-C15P, SBP-C15H
Wall Mount	SBP-140WMW, SBP-250WMW, SBP-300WMW, SBP-300WMW1, SBP-400WMW
Wall Mount Adaptor	SBP-115PFA, SBP-300BW1
Pole Mount	SBD-140PMB, SBD-140PMW, SBP-300PMW2
In-ceiling Mount	SHD-1400FW, SHD-1400FPW
Corner Mount	SBD-140KMB, SBP-156KMW, SBP-300KMW1
Parapet Mount	SBP-156LMW1, SBP-300LMW
Tilt Mount	SBV-140TMW
Cabinet	SBP-150NBW, SBP-300NBW
Dome Cover	SPB-VAN82W
Conduit Adaptor	SBP-060BA
Other Compatible Models	SPP-C7400, SPP-C1900

Design and specifications are subject to change without notice. The latest product information / specification can be found at HanwhaVision.com.
Hanwha Vision is formerly known as Hanwha Techwin.

© Hanwha Vision CO., LTD. All rights reserved.

DORI (EN62676-4 standard)	
Detect (25PPM/ 8PPF)	Wide: 30.5m(100.03ft) / Tele: 76.6m(251.27ft)
Observe (63PPM/ 19PPF)	Wide: 12.2m(40.01ft) / Tele: 30.6m(100.51ft)
Recognize (125PPM/ 38PPF)	Wide: 6.1m(20.01ft) / Tele: 15.3m(50.25ft)
Identify (250PPM/ 76PPF)	Wide: 3.0m(10.00ft) / Tele: 7.7m(25.13ft)

Design and specifications are subject to change without notice. The latest product information / specification can be found at HanwhaVision.com.
Hanwha Vision is formerly known as Hanwha Techwin.

© Hanwha Vision CO., LTD. All rights reserved.

QNV-C6083R

2MP AI IR Vandal Dome Camera

CAD

Unit:mm [inch]

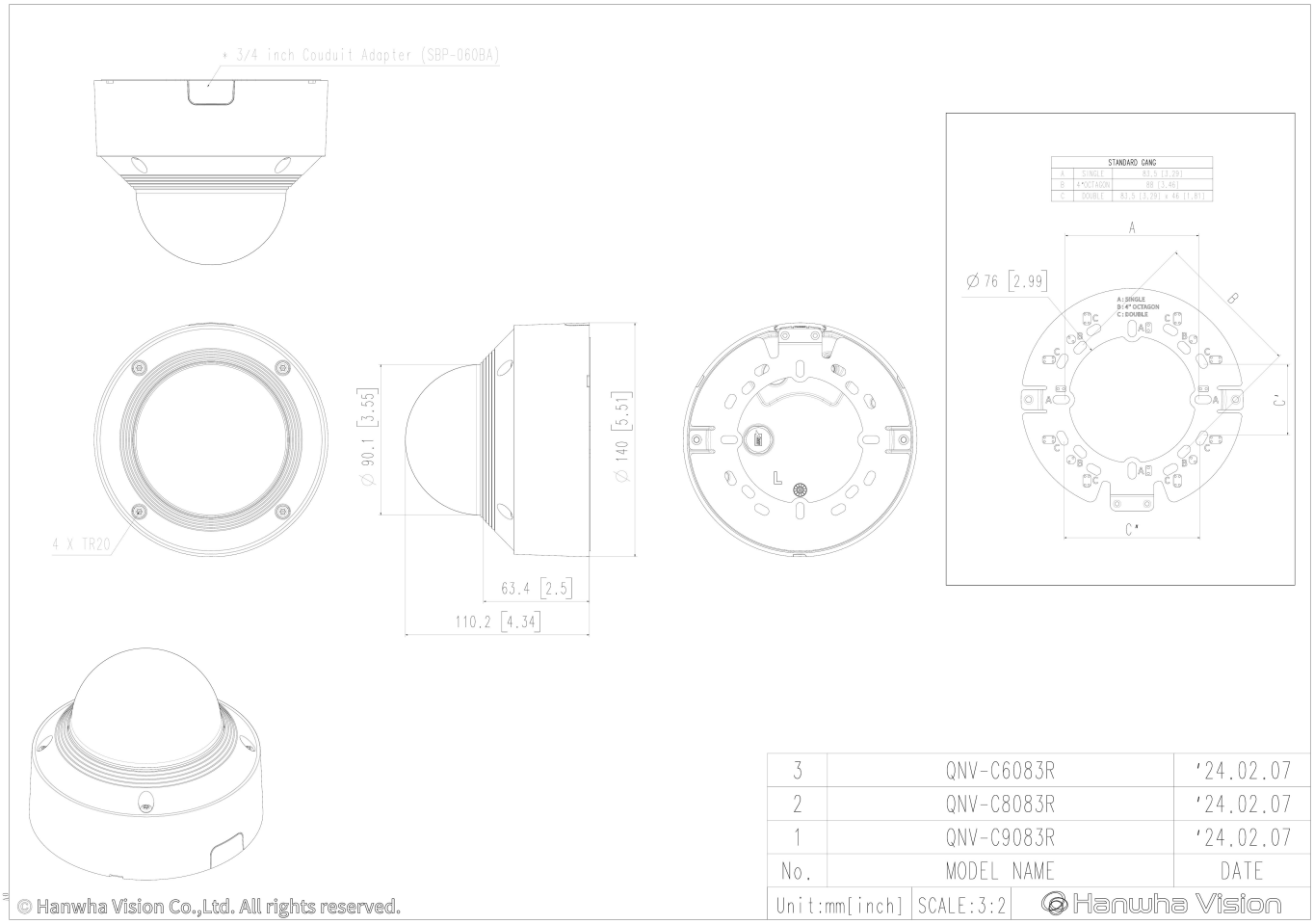

Design and specifications are subject to change without notice. The latest product information / specification can be found at HanwhaVision.com.
Hanwha Vision is formerly known as Hanwha Techwin.

© Hanwha Vision CO., LTD. All rights reserved.