ExSite® Enhanced Fixed 2 Series

2 MP

See in total darkness or blinding light within hazardous environments

The ExSite® Enhanced 2 explosion-proof camera system is purpose-built to monitor operations and control processes in hazardous locations with risks of explosion, due to the presence of flammable liquids, gases or dust. This camera system offers form factors in PTZ, IR PTZ, bullet, and compact bullet and is built with corrosion-resistant stainless steel construction. For sites requiring strict compliance measures, this camera system adheres to international standards (UL, CSA, ATEX, IECEx, EACEx, KCs, UKEx, INMETRO). It provides operators crisp and clear evidence with up to 30X optical zoom with true WDR and low light capabilities for challenging lighting conditions common to hazardous areas.

Features

Pelco Smart Analytics Powered By Motorola Solutions

Enhanced detection, tracking and classification of people and vehicles allowing operators to review situations needing immediate attention for faster response time.

Hazardous Location Certifications

Heavy-duty housing meets stringent explosion-proof and dust ignition-proof requirements while complying with international standards (UL, CSA, ATEX, IECEx, EACEx, KCs, UKEx, INMETRO).

HIGH-TEMPERATURE RANGE

Optimized to operate reliably even at increased temperature variances: from -40°C (-40°F) up to +65°C (+149°F) while maintaining compliance to the T5 or T6 (<85°C) surface temperature.

Stainless Steel Construction

AISI 316L stainless steel construction for exceptional resistance to corrosion, which guarantees efficient video surveillance in both onshore and offshore marine environments.

H.264 and H.265 Smart Compression Technology

Retains image quality and critical information while reducing and bandwidth requirements to lower cost of ownership.

ONVIF® Compliant

ONVIF Profile S, T, G and Q compliance allows easy integration with existing ONVIF infrastructures.

Wide Dynamic Range

Captures details in scenes with both very bright and very dark areas.

Low Light Technology

Offers excellent image detail in low-light settings.

ONVIF is a trademark of Onvif, Inc.

For more information, contact your local Pelco sales representative today at pelco.com/about/contact-us/#form.

MOTOROLA SOLUTIONS

PELCO

Specifications

Image Performance		2.0 MP
Image Sensor		1/2.8" progressive scan CMOS
Maximum Resolution (H x V)		1920 (H) × 1212 (V)
Aspect Ratio		16:9
Min Illumination		0.1 lux (F/1.6) in color mode; 0.03 lux F/1.6) in monochrome
Dynamic Range	WDR Off	83 dB
	WDR On	Up to 120 dB
Image Rate		Up to 60 fps
Aspect Ratio (Resolution Scaling)		Down to (16:9) 384×216 or (5:4) 320×256
3D Noise Reduction Filter		Yes

* The distances and the performance depend on the environmental conditions. Illumination activation by software can be activated via presets or the zoom factor, based on the scene brightness, from alarm input or manually.

Lens		2.0 MP
Lens		F1.6, 4.3-129 mm (30x zoom) remote focus and zoom
Angle of View	Horizontal	(16:9) 2.34° - 65.1°
	Vertical	(16:9) 1.36° - 38.4°
Zoom		Up to 30x

Image Control	
Video Compression	H.264 and H.265 Pelco Smart Compression, Motion JPEG
Streaming	Multi-stream H.264, Multi-stream H.265, Motion JPEG
Motion Detection	Pixel motion: Selectable sensitivity and threshold. Classified object detection
Electronic Shutter Control	Automatic, Manual (1/1 to 1/30,000 sec)
Iris Control	P-Iris, Automatic, Open, Closed
Day/Night Control	Mechanical IR cut filter. Automatic, Manual
Flicker Control	60 Hz, 50 Hz
White Balance	Automatic, Manual
Backlight Compensation	On/Off
Privacy Zones	Up to 64 zones
Digital Defog	Adjustable/Off

Network	
Network	100BASE-TX
Ports	RJ45 connector (CAT5E cabling)
ONVIF	ONVIF compliance Profile S, Profile T, and Profile G (www.onvif.org)
Security	Password protection, HTTPS encryption, digest authentication, WS authentication, user access log, 802.1x port based authentication
Protocols	IPv6, IPv4, HTTP, HTTPS, SOAP, DNS, NTP, RTSP, RTCP, RTP, TCP, UDP, IGMPv2, ICMP, DHCP, Zeroconf, ARP, HSTS
Streaming Protocols	RTP/UDP, RTP/UDP multicast, RTP/RTSP/TCP, RTP/RTSP/HTTP/TCP, RTP/RTSP/HTTPS/TCP, HTTP
Device Management Protocols	SNMP v2c, SNMP v3

Mechanical	
Dimensions (ØxL)	Ø155.5 mm x 264.0 mm; Ø6.12" x 10.4" (dimensions without sunshield)

Mechanical	
Weight	With 4m cable: 8.5 kg (18.7 lbs); with 10m cable: 12.0 kg (26.5 lbs.)
Construction	AISI 316L stainless steel
Finish	Electro-polished surface
Wiper	Yes
Cable Entry	3/4" NPT
Cable Gland	Ex db and tb 3/4" NPT and preinstalled armored cable or with tail cable
Armored Cable Option	External diameter: 20.5 mm (0.81") ± 0.5 mm (0.2") Diameter under armature: 16.0 mm (0.63") Color: black RAL 9005 Composition: 3 × 2.5 mm^2 (13 AWG), 7 × 0.34 mm^2 (22 AWG), 4 × 2 × 0.20 mm^2 (24 AWG) (cat. 5E)
Cable Tail Option	3 × 2.5 mm^2 (13 AWG), external diameter 8.7 mm (0.34") 7 × 0.34 mm^2 (22 AWG), external diameter 6.4 mm (0.25") 4 × 2 × 0.22 mm^2 (24 AWG) (cat. 5E), external diameter 7.9 mm (0.31")

Electrical	
Local Storage	MicroSD/microSDHC/microSDXC slot, up to 2 TB supported - video speed class card required. Class V10 or better recommended.
Power Consumption	53 W
Input Voltage (Power)	VDC: 12 V ± 5% (3.5A), VDC: 24 V ± 5% (2.2A), VAC: 24 V ± 10% (2.2A) at 50/60 Hz
Alarm Inputs	1
Relay Outputs	1 (1A, 30 VAC/60 VDC max)
Audio Input and Output	None

Environmental	
Operating Temperature	-50 °C to +60 °C (-58 °F to 140 °F)
Storage Temperature	-40 °C to +55 °C (-40 °F to 131 °F)
Humidity	10% - 95% non-condensing
Cold Start	Up to 2 hour startup delay at temperature lower than -10 °C (14 °F)

Certifications	
Certifications/Directives	cULus, CE, UKCA, ROHS, RCM, KC, BIS
Safety	UL/CSA 62368-1, EN/IEC 62368-1, IS 13252 (PART 1): 2010/IEC 60950-1: 2005
Hazardous	ATEX (EN IEC 60079-0, EN 60079-1, EN 60079-31), IECEx (IEC 60079-0, IEC 60079-1, IEC 60079-31), EAC EX (TR CU 012/2011), INMETRO (ABNT NBR IEC 60079-0, ABNT NBR IEC 60079-1, ABNT NBR IEC 60079-31), UK Ex (EN IEC 60079-0, EN 60079-1, EN 60079-31), KCs (Employment and labor department 2016-54), cable tail versions, ETL listed for USA (UL 60079-0, UL 60079-1, UL 60079-31) cable tail versions, ETL listed for Canada (CAN/CSA-C22.2 NO. 60079-0, CAN/CSA-C22.2 NO. 60079-1, CAN/ CSA-C22.2 NO. 60079-31) cable tail versions
Environmental and Performance	EN/IEC 60529: IP66, IP67, IP68, IP69 EN 60068-2-52: salt spray UL50E: 4X, 6P
Electromagnetic Emissions	FCC Part 15 Subpart B Class A, IC ICES-003 Class A, EN 55032 Class A, EN 61000-6-3
Electromagnetic Immunity	EN 50130-4
Vibration Test	EN 50130-5, EN 60068-2-6
Warranty	3-year limited warranty. 5-year extended warranty is available.

Explosion-Proof Certifications

Cameras with Cable Tail for Installation with Conduit

Part Number	Certification	Marking	Ambient Temperature	Cable Entry Temperature
EXF2230-52-C4 EXF2230-52-C0	ATEX ITS15ATEX18330X	Ⓔx II 2 G Ex db IIC T5 Gb Ⓔx II 2 D Ex tb IIIC T100°C Db IP66/IP68	-50°C ≤ Ta ≤ +65°C	+80°C
	IECEx ITS 15.0030X	Ex db IIC T5 Gb Ex tb IIIC T100°C Db IP66/IP68		
	INMETRO UL BR 16.0004X	Ex db IIC T5 Gb Ex tb IIIC T100°C Db IP66/IP68		
	EAC Ex RU C-IT.H A91.B.00274/22	1Ex db IIC T5 Gb X Ex tb IIIC T100°C Db X		
	UK Ex - ITS21UKEX0379X	Ⓔx II 2 G Ex db IIC T5 Gb Ⓔx II 2 D Ex tb IIIC T100°C Db IP66/IP68		
	KCs 19-KA4BO-0180X, 19-KA4BO-0181X	Ex db IIC T5 Gb Ex tb IIIC T100°C Db		
	cETLus 5002689 Hazardous Location America	Class I Zone 1 AEx db IIC T5 Gb Zone 21 AEx tb IIIC T100°C Db Class I Div 2 Group A,B,C & D T5 Class II Div 2 Group F & G T100°C		
	cETLus 5002689 Hazardous Location Canada	Ex db IIC T5 Gb Ex tb IIIC T100°C Db Class I Div 2 Group A,B,C & D T5 Class II Div 2 Group F & G T100°C		
EXF2230-62-C4 EXF2230-62-C0	ATEX ITS15ATEX18330X	Ⓔx II 2 G Ex db IIC T6 Gb Ⓔx II 2 D Ex tb IIIC T85°C Db IP66/IP68	-50°C ≤ Ta ≤ +55°C	+80°C
	IECEx ITS 15.0030X	Ex db IIC T6 Gb Ex tb IIIC T85°C Db IP66/IP68		
	INMETRO UL BR 16.0004X	Ex db IIC T6 Gb Ex tb IIIC T85°C Db IP66/IP68		
	EAC Ex RU C-IT.H A91.B.00274/22	1Ex db IIC T6 Gb X Ex tb IIIC T85°C Db X		
	UK Ex - ITS21UKEX0379X	Ⓔx II 2 G Ex db IIC T6 Gb Ⓔx II 2 D Ex tb IIIC T85°C Db IP66/IP68		
	KCs 19-KA4BO-0180X, 19-KA4BO-0181X	Ex db IIC T6 Gb Ex tb IIIC T85°C Db		
	cETLus 5002689 Hazardous Location America	Class I Zone 1 AEx db IIC T6 Gb Zone 21 AEx tb IIIC T85°C Db Class I Div 2 Group A,B,C & D T6 Class II Div 2 Group F & G T85°C		
	cETLus 5002689 Hazardous Location Canada	Ex db IIC T6 Gb Ex tb IIIC T85°C Db Class I Div 2 Group A,B,C & D T6 Class II Div 2 Group F & G T85°C		

Cameras with Armored Cable

Part Number	Certification	Marking	Ambient Temperature	Cable Entry Temperature
EXF2230-52-A4 EXF2230-52-A0	ITS 15 ATEX 18330X	Ex II 2 G Ex db IIC T5 Gb Ex II 2 D Ex tb IIIC T100°C Db IP66/IP68	-60°C ≤ Ta ≤ +65°C	+80°C
	IECEx ITS 15.0030X	Ex db IIC T5 Gb Ex tb IIIC T100°C Db IP66/IP68		
	INMETRO UL BR 16.0004X	Ex db IIC T5 Gb Ex tb IIIC T100°C Db IP66/IP68		
	EAC Ex RU C-IT.H A91.B.00274/22	1Ex db IIC T5 Gb X Ex tb IIIC T100°C Db X		
	UK Ex - ITS21UKEX0379X	Ex II 2 G Ex db IIC T5 Gb Ex II 2 D Ex tb IIIC T100°C Db IP66/IP68		
EXF2230-62-A4 EXF2230-62-A0	ATEX ITS15ATEX18330X	Ex II 2 G Ex db IIC T6 Gb Ex II 2 D Ex tb IIIC T85°C Db IP66/IP68	-60°C ≤ Ta ≤ +55°C	+80°C
	IECEx ITS 15.0030X	Ex db IIC T6 Gb Ex tb IIIC T85°C Db IP66/IP68		
	INMETRO UL BR 16.0004X	Ex db IIC T6 Gb Ex tb IIIC T85°C Db IP66/IP68		
	EAC Ex RU C-IT.H A91.B.00274/22	1Ex db IIC T6 Gb X Ex tb IIIC T85°C Db X		
	UK Ex - ITS21UKEX0379X	Ex II 2 G Ex db IIC T6 Gb Ex II 2 D Ex tb IIIC T85°C Db IP66/IP68		

Analytics Specifications

Supported Analytics Events*	
Objects in Area	The event is triggered when the selected object type moves into the region of interest.
Object Loitering	The event is triggered when the selected object type moves into the region of interest, then stays for an extended amount of time.
Objects Crossing Beam	The event is triggered when the specified number of objects have crossed the directional beam that is configured over the camera's field of view. The beam can be unidirectional or bidirectional.
Object Appears or Enters Area	The event is triggered by each object that enters the region of interest and can also be used to count objects.
Object Not Present in Area	The event is triggered when no objects are present in the region of interest.
Objects Enter Area	The event is triggered when the specified number of objects have entered the region of interest.
Objects Leave Area	The event is triggered when the specified number of objects have left the region of interest.
Object Stops in Area	The event is triggered when an object moves into a region of interest and then stops moving for the specified threshold time.
Direction Violated	The event is triggered when an object moves in the prohibited direction of travel.
Sabotage Detection	The event is triggered when the scene unexpectedly changes.

*Pelco Smart Analytics powered by Motorola Solutions.

Pelco Elevate Supported Features	
Image Health	Detects incremental changes in the cameras view, such as position shifts or obstructions. Notifies users through ONVIF conformant events and summarized email reports.

System Model Numbers

System Resolution	Model #	Description
2 MP 30X	EXF2230-52-A4	ExSite Enhanced Series 2, 2MP 30x Zoom, Stainless Steel Fixed Camera, 4m armored cable with gland, T5
2 MP 30X	EXF2230-62-A4	ExSite Enhanced Series 2, 2MP 30x Zoom, Stainless Steel Fixed Camera, 4m armored cable with gland, T6
2 MP 30X	EXF2230-52-A0	ExSite Enhanced Series 2, 2MP 30x Zoom, Stainless Steel Fixed Camera, 10m armored cable with gland, T5
2 MP 30X	EXF2230-62-A0	ExSite Enhanced Series 2, 2MP 30x Zoom, Stainless Steel Fixed Camera, 10m armored cable with gland, T6
2 MP 30X	EXF2230-52-C4	ExSite Enhanced Series 2, 2MP 30x Zoom, Stainless Steel Fixed Camera, 4m cable tail, T5
2 MP 30X	EXF2230-62-C4	ExSite Enhanced Series 2, 2MP 30x Zoom, Stainless Steel Fixed Camera, 4m cable tail, T6
2 MP 30X	EXF2230-52-C0	ExSite Enhanced Series 2, 2MP 30x Zoom, Stainless Steel Fixed Camera, 10m cable tail, T5
2 MP 30X	EXF2230-62-C0	ExSite Enhanced Series 2, 2MP 30x Zoom, Stainless Steel Fixed Camera, 10m cable tail, T6

Mounting Accessories

Part #	Description
NXWBS1	Wall bracket for use with EXF2230 cameras. AISI 316L stainless steel.
MHXWFWCA	Parapet mounting bracket for use with EXF2230 cameras. AISI 316L stainless steel.
NXFWBT	Vertical riser, 124 mm (4.9"), for use with EXF2230 cameras. AISI 316L stainless steel.
NXWTU	Wall adapter module, for use with NXWBS1. AISI 316L stainless steel.
NXCOL	Pole mount adapter for use with EXF2230 cameras or explosion proof washers. For pole diameters from 110 mm (4.3") to 150 mm (5.9"). Max load 50 kg (110 lb.). AISI 316L stainless steel.
NXCW	Corner mount adapter for use with EXF2230 cameras or explosion proof washers. Max load 50 kg (110 lb.). AISI 316L stainless steel.

Cable Glands and Accessories 3/4" NPT

Type	Certification	Operating Temp.	Cable	Part Number	Maximum diameter of the external sheath (A)	Maximum diameter of the internal sheath (B)	Maximum diameter of the conductors bundle (C)
Conduit Sealing Fitting	IECEx / ATEX / cCSAus / EAC Ex	-60°C (-76°F) / +80°C (+176°F)	-	OCTEXP3/4C	-	-	11.0 mm (0.43 in)

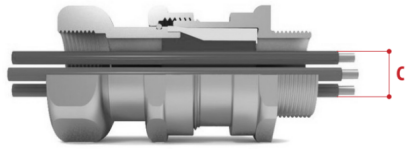

Conduit sealing fitting

Explosion-Proof Communication Box

A communication box includes a 3-port RJ45 and 1 SFP port Ethernet switch and 24 VAC output for powering up to one of the following:

- 2x EXC2602 fixed compact cameras
- 2x EXF2230 fixed cameras with 2x washer pump
- 1x EXP2230 PTZ camera with 1x washer pump

Part #	Description
MBX1MAA MBX2MAA MBX3MAA	AISI 316L stainless steel housing, 230 VAC input. AISI 316L stainless steel housing, 24 VAC input. AISI 316L stainless steel housing, 120 VAC input.
MBXMP	Adapter plate for communication box to MPXCOL or MPXCW mounts. AISI 316L stainless steel housing.
MBXWRE	Wrench for opening communication boxes, MBX.
MPXCOL	Pole mount adapter for use with ExSite cameras. For pole diameters from 110 mm (4.3”) to 150 mm (5.9”). Max load 50 kg (110 lb.). AISI 316L stainless steel.
MPXCW	Corner mount adapter for use with ExSite cameras. Max load 50 kg (110 lb.). AISI 316L stainless steel.

Explosion-Proof Washer

A 10L (2.6 gal) tank with integrated manual pump and delivery up to 20m (66 ft), 24 VAC/VDC input.

Part #	Description
WASEX2T4AT WASEX2T4IC WASEX2T4IN WASEX2T4KC WASEX2T4GOR WASEX2T4UL	ATEX certified solenoid valve. IECEX certified solenoid valve. INMETRO certified solenoid valve. KCS certified solenoid valve (only 24 VDC). EAC Ex certified solenoid valve. cULus certified solenoid valve.
NXCOL	Pole mount adapter for use with EXF2230 cameras or explosion proof washers. For pole diameters from 110 mm (4.3”) to 150 mm (5.9”). Max load 50 kg (110 lb.). AISI 316L stainless steel.
NXCW	Corner mount adapter for use with EXF2230 cameras or explosion proof washers. Max load 50 kg (110 lb.). AISI 316L stainless steel.

Dimensions

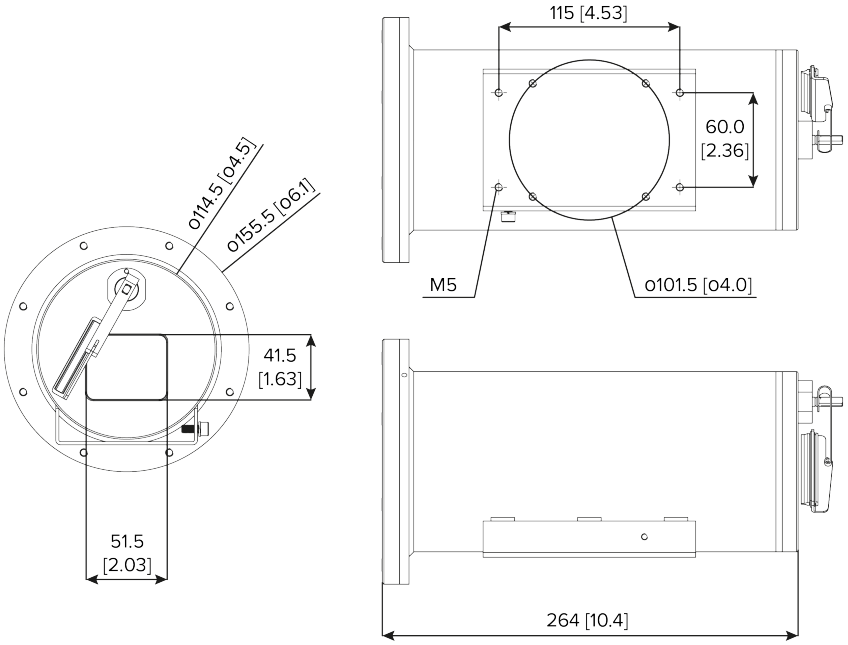

Values in parentheses are inches; all others are millimeters.

Support

Learn more and find additional documentation at pelco.com or email support@pelco.com for specific product support.

Jan 2024 | | Rev 2

© 2024, Motorola Solutions, Inc. All rights reserved. MOTOROLA, MOTO, MOTOROLA SOLUTIONS, and the Stylized M Logo are trademarks or registered trademarks of Motorola Trademark Holdings, LLC and are used under license. Pelco, the Pelco logo, and other trademarks associated with Pelco products referred to in this publication are trademarks of Pelco, Inc. or its affiliates. All other product names and services are the property of their respective companies. Product specifications and availability are subject to change without notice.