DHI-ITC414-PH5B-TF2

Parking Space Detection Camera

System Overview

The DHI-ITC414-PH5B-TF2 model of the Parking Space Detection Camera can monitor 6 parking spaces in real time, recognize vehicles and license plates, and detect vehicle models and colors. Through the color of the indicators in each parking space, you can easily tell whether there are vehicles parked there. Also, you can configure the 7 indicator colors.

Functions

Real-time Monitoring of Parking Space Status

With its built-in deep learning algorithms, the camera can detect the status of parking spaces in real time, and recognize license plates. It supports sound and light alarms, and can detect line crossing and when unauthorized vehicles are parked in restricted parking spaces.

Seven Color Indicator Lights

Its indicator lights come in 7 colors, and can be configured to display the status of parking spaces.

Power Supply over Network Cable Cascade

Provides a standard 48 VDC power supply for up to 4 cascaded devices through network cables to simplify construction.

Wide Dynamic Range

Not only does it support wide dynamic range, but it is also highly suitable for semi-enclosed parking buildings. The camera also captures images in clear details, even in strong brightness contrast, to ensure the accuracy of detection.

- Ideal for plate recognition and the detection of the status of parking spaces.
- Connects to the intelligent parking lot management system.
- Features line crossing detection, sound and light alarms, and detects when unauthorized vehicles are parked in restricted parking spaces.
- Detects 6 parking spaces at the same time with a detection rate of over 99.5%. The plate recognition rate is over 99%.
- Offers 7 colors to indicate the status of a parking space.
- Standard RS-485 port for connecting external indicators. 1 indicator is assigned to each parking space.
- H.265 codec that supports high compression ratio and an ultra-low bit rate.
- Supports H.264, H.265, and MJPEG flexible coding, and is applicable to various bandwidth and storage environments.
- Supports True WDR, 3D NR, HLC, BLC, and digital watermarking, and is suitable for indoor parking lots.
- Connects to a standard 48 VDC power supply.
- Acts as a power supply for up to 4 cascaded devices through network cables.
- Electrically adjusts the vertical angle of the lens.

Scene

It is suitable for indoor parking lots and semi-enclosed parking buildings.

Technical Specification

Basic

Image Sensor	1/3" CMOS
Max.Detection Space	6
Parking Space Indicator	1, 7 customizable colors (red, yellow, blue, green, cyan, white, and pink)
Image Resolution	2688 (H) × 1520 (V) (OSD black background is not calculated in the pixels)
Video Resolution	4 MP (2688 × 1520); 1080p (1920 × 1080); 720p (1280 × 720); D1 (704 × 576)
Noise Reduction	3D NR
WDR	100 dB
Video Compression	H.265; H.264; MJPEG
Image Encoding Format	JPEG
Video Bit Rate	"H.264: 1743 kbps–13946 kbps H.265: 1743 kbps–13946 kbps MJPEG: 5230 kbps–41838 kbps"
Video Frame Rate	"PAL: Main stream (2688 × 1520@20 fps, 1920 × 1080@20 fps, 1280 × 720@20 fps), sub stream (704 × 576@20 fps) NTSC: Main stream (2688 × 1520@20 fps, 1920 × 1080@20 fps, 1280 × 720@20 fps), sub stream (704 × 576@20 fps)"
Edge Enhancement	Yes
Exposure Mode	Auto; Manual (select from shutter values or customize shutter range)
Field of View	"H: 101.9° V: 54.1° D: 121°"
Lens Angle	Adjustable (depression angle of 10°–34°)

General

Electronic Shutter Speed	Auto/Manual 1/3 s-1/10,000 s
Power Supply	12–48 VDC
Power Consumption	<12 W
Operating Temperature	–20 °C to +50 °C (–4 °F to +122 °F)
Operating Humidity	10%–95% (RH), non-condensing
Protection	IP54
Product Dimensions	120 mm × 136 mm × 105 mm (4.72" × 5.35" × 4.13") (L × W × H)
Net Weight	0.5 kg (1.10 lb)
Gross Weight	0.7 kg (1.54 lb)
Installation	Cable tray mount
Lens	2.8 mm

Function

Security	Authorized username and password, MAC address binding, HTTPS encryption, IEEE 802.1x, and network access control
Shutter Mode	Single shutter
OSD Overlay	Time, address, parking space No., parking space status, plate number, vehicle model, vehicle logo and color
Alarm Event	Illegal access, security error and other events
Auto Registration	Yes
Image Tampering Prevention	Verifies watermarks in videos and images
Audio	Voice broadcast (adjustable volume)
Network Protocol	TCP/IP; HTTP; DHCP; RTSP; NTP; HTTPS

Intelligence

Vehicle Recognition	Recognizes vehicle model, logo, color, and plate number, and collects metadata for unlicensed vehicles. Vehicle recognition rate is over 99.5% and plate recognition rate is over 99%
Parking Space Status Detection	Yes, the indicator color is customizable
Illegal Parking Detection	Detects illegal parking events including vehicle occupies two parking spaces, non-allowlist vehicle occupies parking space, and small vehicle parked in large vehicle's space.

Port

RS-485	1
Network Port	2 × RJ-45 Ethernet ports, 100 M network transmission
Power Output	12 VDC ± 10% voltage output, ≤1 A current output

Ordering Information

Type	Part Number	Description
Parking Space Detection Camera	DHI-ITC414-PH5B-TF2	6 parking spaces, 2.8 mm lens, and 48 VDC power supply over network cable cascade

Installation

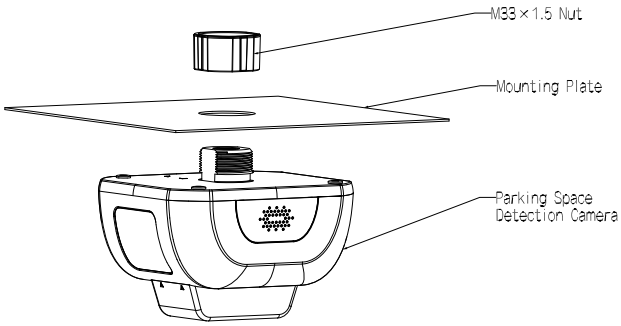

Dimensions (mm[inch])

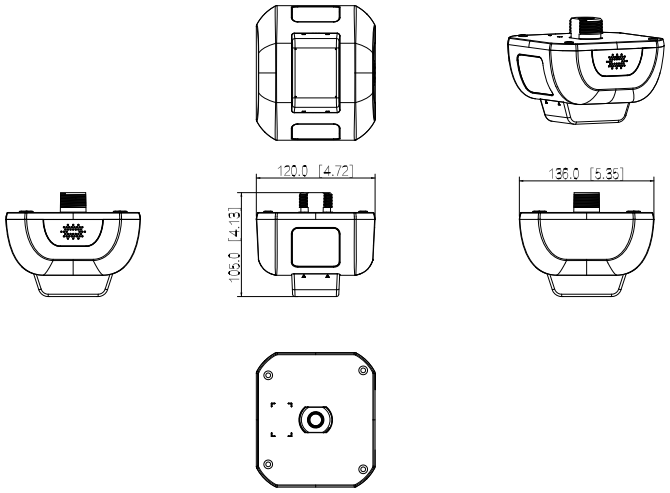

Rev 002.000 © 2022 Dahua. All rights reserved. Design and specifications are subject to change without notice.
The images, specifications and information mentioned in the document are only for reference, and might differ from the actual product.