FPMA-D850BLACK NEWSTAR LCD/TFT DESK STAND

The FPMA-D850BLACK is a desk mount for LCD/TFT screens up to 24" (60 cm).

The NewStar desk mount FPMA-D850BLACK allows you to attach a LCD/TFT screen up to 24" on a desk.

With this mount you can easily swivel, tilt and rotate the monitor. The height adjustment is 18-40 cm. The desk mount can hold screens up to 10 kg and is placed on a desk by a stand.

This model is suited for all LCD/TFT screens with a VESA 75x75 or 100x100 mm hole pattern. If the hole pattern on the back of your screen is different, please contact us for the opportunities.

By using an ergonomic monitorarm you prevent neck- and back complaints.

SPECIFICATIONS

Max. weight	10
Color	Black
Warranty	5 year
Screen size	10 - 24"
Desk mount	Desk stand
VESA minimum	75x75 mm
VESA maximum	100x100 mm
Tilt	180°
Rotation	360°
Screens	1
Height	18 - 40 cm
EAN code	8717371442811

MAX. WEIGHT

SCREEN SIZE

NewStar Products Europe B.V.
Wateringweg 62/B
2031 EJ HAARLEM
THE NETHERLANDS

Phone : +31(0)23-5478888
Fax : +31(0)23-5478889
Email : info@newstar.nl
Website : www.newstar.eu

NewStar cannot be held liable for any inaccuracies and copyrights.
No part of this publication may be reproduced and/or published by print, photocopy, microfilm or in any other way, without prior written permission of NewStar Computer Products Europe BV.

FPMA-D850BLACK NEWSTAR LCD/TFT DESK STAND

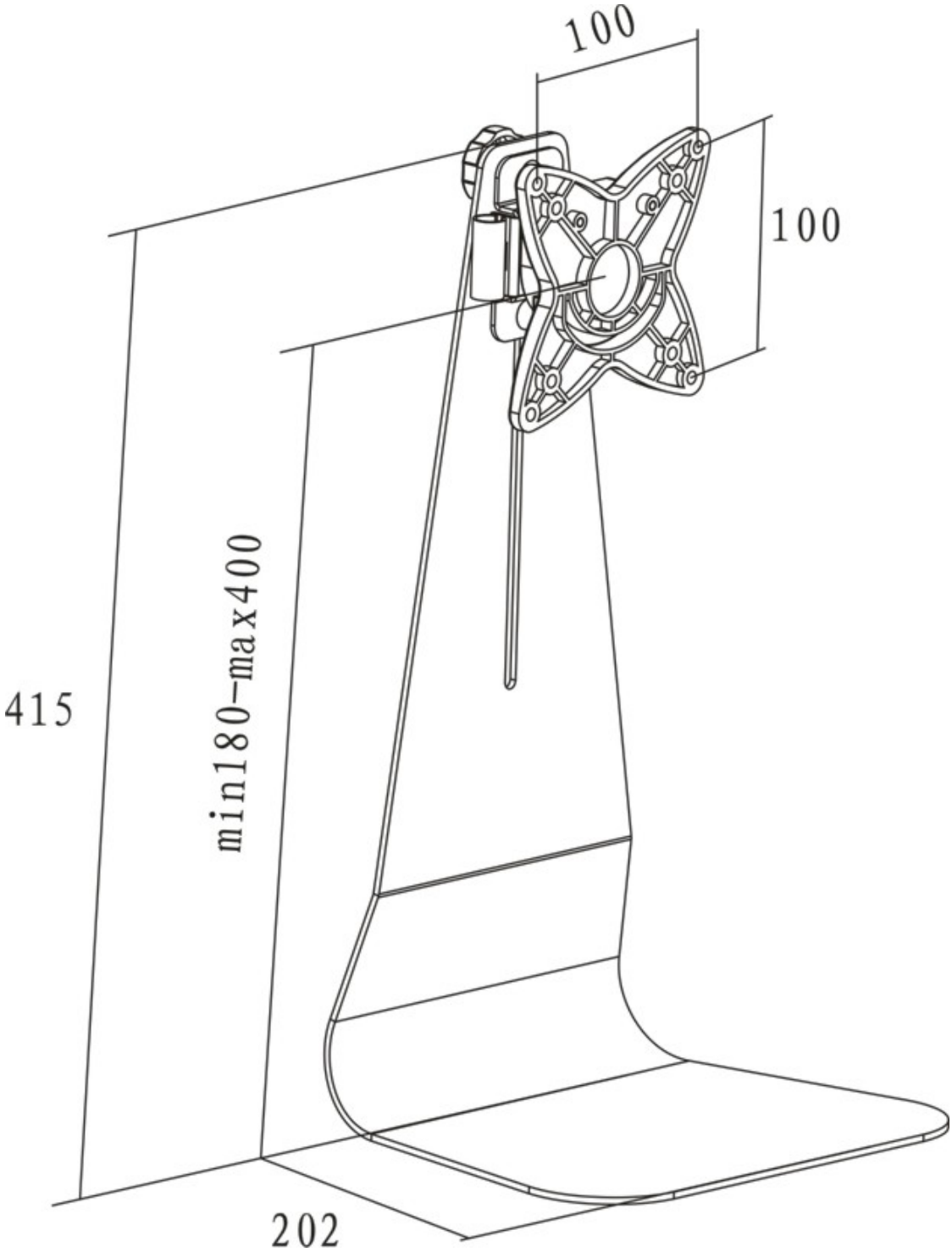

NewStar Products Europe B.V.
Wateringweg 62/B
2031 EJ HAARLEM
THE NETHERLANDS

Phone : +31(0)23-5478888
Fax : +31(0)23-5478889
Email : info@newstar.nl
Website : www.newstar.eu

NewStar cannot be held liable for any inaccuracies and copyrights.
No part of this publication may be reproduced and/or published by print, photocopy, microfilm or in any other way, without prior written permission of NewStar Computer Products Europe BV.