computar

MI3.9-10P

Megapixel Varifocal i-CS P-iris Lens

3X 3.9mm-10mm F1.5 Day & Night
for 1/1.8 type Megapixel Cameras, Motorized Vari-focal, Stepping Motor Iris
Smart Control (I2C)
CS-Mount

Model No.		MI3.9-10P		Effective Lens Aperture	Front	φ25mm	
Focal Length		3.9mm - 10mm			Rear	φ10.0mm	
Max. Aperture Ratio		1:1.5		Back Focal Length	Tele	8.5mm	
Max. Image Format		7.1mm x 5.4mm(φ8.9mm)			Wide	8.5mm	
Operation Range	Iris	F1.5 - F16C		Flange Back Length		12.5mm	
	Focus	0.8m - Inf.		Mount		CS-Mount	
	Zoom	3.9mm - 10mm		Filter Size		–	
Control	Iris	Smart Control (I2C)		Dimensions		φ54.4 mm× 67.5 mm× 59 mm	
	Focus	Smart Control (I2C)		Weight		110g	
	Zoom	Smart Control (I2C)					
Angle of View	D	1/1.8 type	144.1° - 52.9°	1/2 type	124.8° - 47.5°	1/3 type	89.3° – 35.5°
	H		108.1° - 42.1°		96.0° - 37.9°		70.2° – 28.4°
	V		79.7° - 32.0°		70.2° - 28.4°		52.1° – 21.3°
Supply Voltage		DC3.3V		Operating Temperature		-10℃ - +65℃	
Current		450mA MAX					

Dimensions

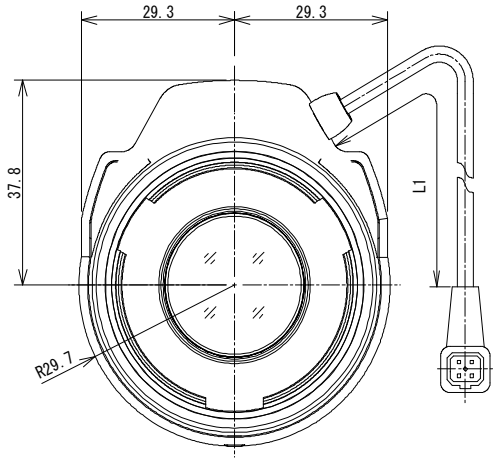

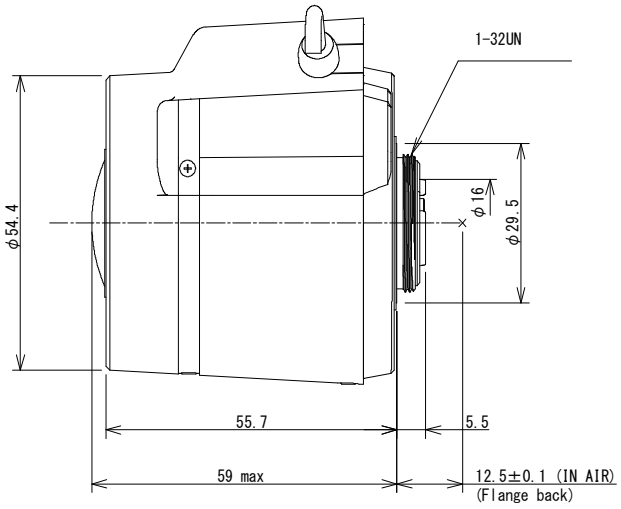

Wiring Diagram

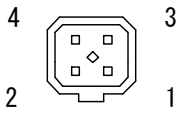

1	Vcc
2	SDA
3	GND
4	SCL

Computar Model EG3Z3915TCS-MPWIR