QUICK START GUIDE

I56-6965-000

OSI-RIE-xx
Smoke Detection System

Pittway Tecnologica S.r.l.,
Via Caboto 19/3,
34147 TRIESTE, Italy

SPECIFICATIONS

Wire Gauge for Terminals:	22 AWG (0.64 mm, 0.34 mm²) to 14 AWG (1.6 mm, 2.08 mm²)
Operating Voltage Range:	Without isolator: 15 to 32 VDC With isolator: 15-28.5V
Maximum Standby Current:	13 mA @ 32 VDC, 20 mA @ 15 VDC
Maximum Alarm Current (LED on):	22 mA @ 32 VDC, 22 mA @ 15 VDC
Operating Humidity Range:	0% to 95% Relative Humidity, Non-condensing
Operating Temperature Range:	–4°F to 131°F (-20°C to +55°C). UL-Listed for use from 32°F to 100°F (0°C to 37.8°C)
Adjustment Angle:	20 degrees vertical, 50 degrees horizontal
Sensitivity Levels:	Level 1 25%, Level 2 30%, Level 3 40%, Level 4 50%
Fault Condition (Trouble):	Long-term drift reference out of 20% range, beam blockage or detector out of alignment, imager saturated
Alignment Aid:	LED directional arrows
Alarm Indicator:	Local red LED and remote output

This guide provides information on how to install the OSI-RIE-xx Smoke Detection System.

Extensive product and critical product security information can be found in the OSI-RIE-xx Installation Guide (Document No. E56-6965) available at www.systemsensoreurope.com/products/category/beam-smoke-detectors/.

The OSI-RIE-xx system consists of an Imager and a reflector. (See Figure 1.)

The products shall be powered from a EN54-4 certified AC/DC Power converters to be in compliance for CE certification.

FIGURE 1. IMAGER AND REFLECTOR

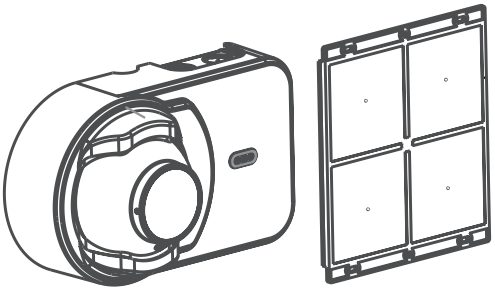

C2051-00, C2052-00

DETERMINE THE POSITIONS OF THE IMAGER AND REFLECTOR COMPONENTS

Make sure that the intended mounting locations meet the following criteria (See Figure 2.):

- Detector spacing must comply with local codes and standards
- Reflector must be located within the Field of View (FOV) of the Imager
- Clear path between the reflector and Imager
- Mounted well above the head-height of people and obstructions
- Avoid direct sunlight onto the units

The Imager and reflector should be placed within a recommended distance below the ceiling. (See Figure 3.) This value will vary according to regional specifications, geometry, and specific requirements for the installation. The distance for flat ceilings and basic spacing requirements (S) is shown in the following table.

Standard	Distance from Ceiling	Maximum Spacing (S)
NFPA 72	300 mm (12 in.) minimum	18.3 m (60 ft)
AS1670.1	25 to 600 mm (1 to 23.6 in.)	14 m (45.9 ft)
BS5839.1	25 to 600 mm (1 to 23.6 in.)	15 m (49.2 ft)
GB50166	300 to 1000 mm (11.8 to 39.4 in.)	14 m (45.9 ft)

For full information on spacing requirements, please refer to your local codes and standards.

FIGURE 2. MOUNTING LOCATIONS

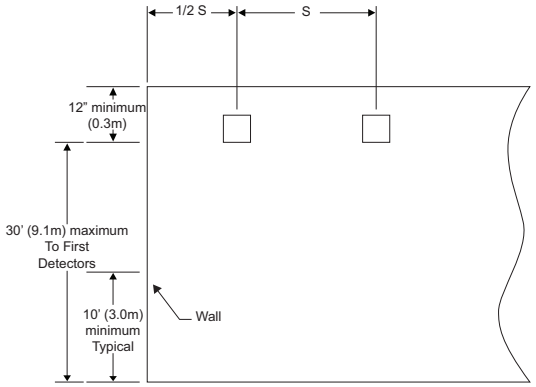

C2053-00

FIGURE 3. MOUNTING LOCATIONS

Ex. Distances according to NFPA 72.

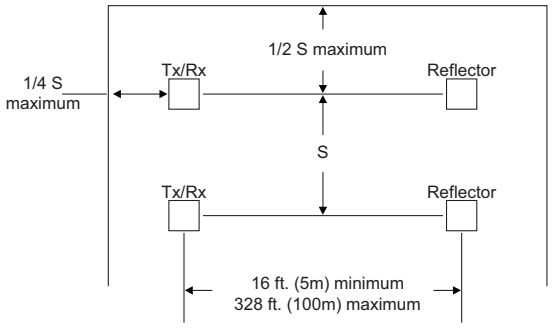

C2054-00

MOUNT THE REFLECTOR USING THE DRILL TEMPLATE

Refer to Appendix II. in Installation guide for drill template instructions. (See Figure 4.)

MOUNTING THE DETECTOR

Remove detachable front rim cover. To detach the Imager part from the back-box, loosen the 3 holding screws.

To provide cable access to the Termination Card of the Imager remove the cut-outs from the back, bottom or top of the main assembly by using a sharp blade to cut around the circular discs.

Secure the back box directly onto the mounting surface using any suitable number of the 5 pilot holes in the backbox.

Use appropriate fasteners to secure the back box component to the mounting surface.

FIGURE 4.MOUNTING THE DETECTOR

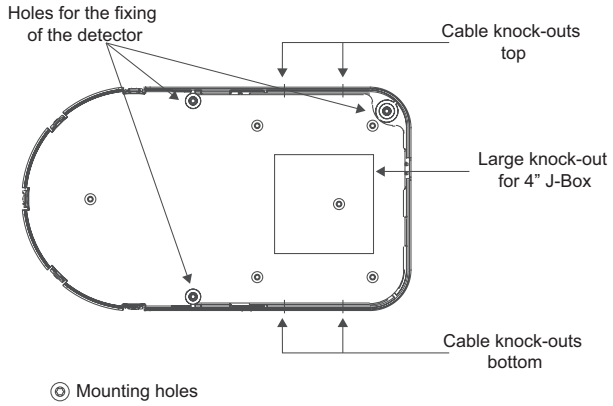

C2055-00

WIRE THE TERMINATION CARD ON THE IMAGER

- Wire the initiating device circuit on the Imager Termination Card using the addressable loop. (See Figure 5.)
- Wire external power to the unit via the POWER terminals.
- Wire the Remote Indicator and/or remote test or reset units if required (See Figure 6.).
- Securely connect the wires to the plug-in terminals and engage in the receptacles at the back of the Imager.
- Switch on the heater if the installation requires so.
- Set the detector address using the rotary switches
- Re-attach the Imager to the back box
- Remove the protective film from the lens surface of the imager.
- Connect power to the Imager.

FIGURE 5. WIRING THE TERMINATION CARD

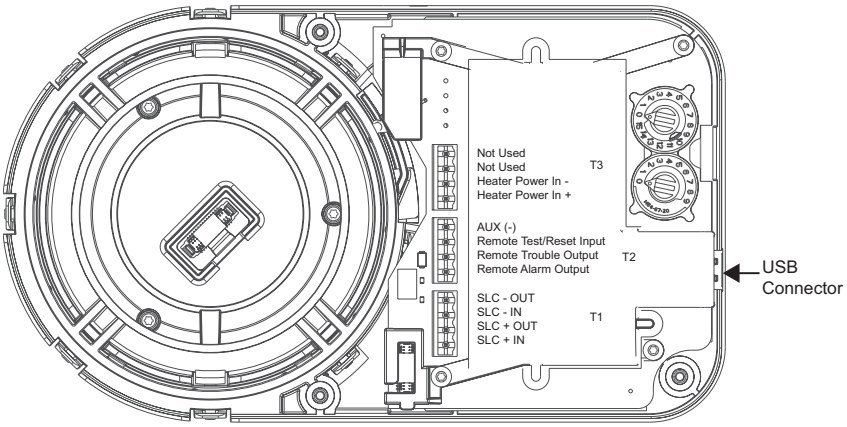

C2056-00

FIGURE 6. WIRING THE TERMINATION CARD

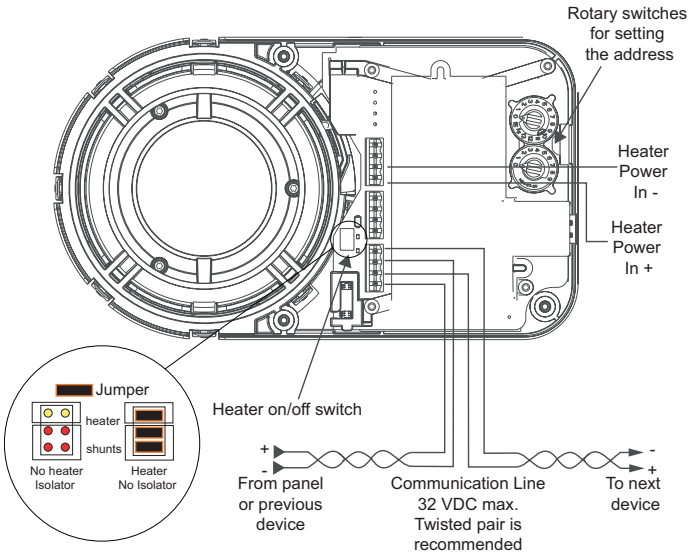

C2057-00

FIGURE 7. OSI-RI TERMINALS

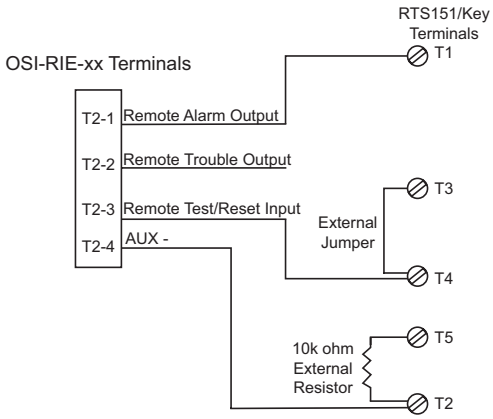

Wiring: Single 2 pair cable , 0.8mm^2, unshielded.

C2058-00

FIGURE 8. REMOTE LED CONNECTIONS

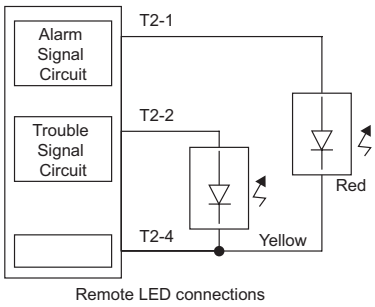

C2059-00

INITIALIZATION AND COMMISSIONING

Ensure that neither you nor any other objects are in the line of sight between the detector and the reflector and start to manually align the Imager to the reflector (See Figure 9.)

The OSP-002 Laser Alignment Tool can be used for the rough alignment if the system is to be installed at longer distances or in heavy lit environments.

Follow these steps to adjust the optical sphere of the detector component to align the system (See Figure 10.):

- Make sure the lever is the 3 o'clock position.
- The 4 arrows will intuitively guide the user to optimal eyeball alignment.

Likely the alignment process will start with all arrows red.

- Gently move the eyeball until all arrows and the middle green LED blink green for the eyeball to be optimal aligned (See Figure 11.).
- When all arrows are green, gently lock the eyeball by moving the lever down till the eyeball is solidly locked. The lever is now in the 5 o'clock position and you feel the resistance of the locked position.

FIGURE 9. COARSE ALIGNMENT

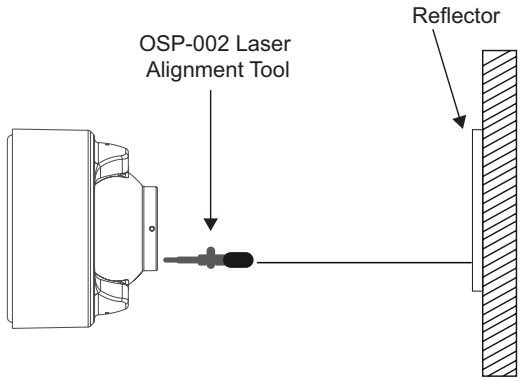

C2060-00

FIGURE 10. ARROW ARRAY

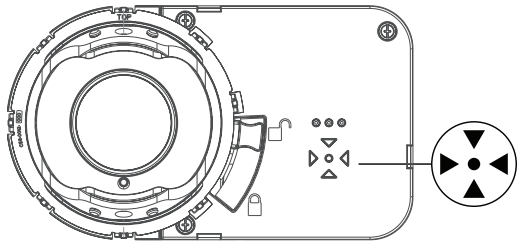

C2061-00

FIGURE 11. LOCKING AND SECURING EYE BALL

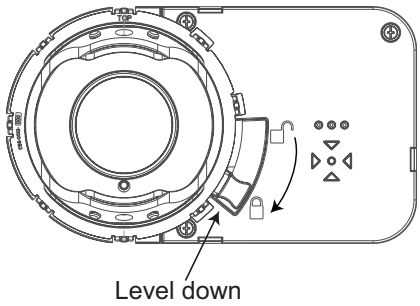

C2062-00

By locking the eyeball an internal switch is activated and the detector will now start its initiation or commissioning process. A normal commissioning process takes roughly 10 seconds. During the commissioning process, the beam path must remain clear from object intrusions.In this process cycle, the detector will measure the size of the reflector in the FOV and set the sensitivity automatically to the optimum sensitivity for the specific distance.

Before going in operational mode, the detector will show its set sensitivity. This is shown by blinking the 4 arrows to the color yellow, reflecting the % of selected obscuration/sensitivity. The key is; 1 blink = 25%, 2 blinks = 30%, 3 blinks = 40% and 4 blinks = 50%. After 5 seconds, the scenario will be repeated a second time and the arrows LEDs go out and the front OK LED blinks green. The detector is now in operation and working correctly.

The paintable rim can now be snapped over the front to secure the locking lever and to hide the alignment LEDS and locking mechanism.

Applying the cover also secures the locking lever in position.

TESTING THE INSTALLATION

After the commissioning, the detector must be tested for correct alarming by using the OSP-004 test filter at the reflector or using the remote test station. When using the RTS151KEY for testing the detector, the remote fault LED will blink the set sensitivity of the detector. The number of blinks, similar to section 5, will represent the set sensitivity and the sequence is repeated every 3 seconds till the detector is reset.

IMAGER RESET

The fault LED is non-latching but the alarm LED can be set to latching by the FACP. The Imager alarm can be reset from the FACP.

OPERATION AFTER A POWER FAILURE

After a power failure of any duration, when the supply is restored, the detector will check the possible new situation versus it memorized data.

If the reflector is found in the same position and all parameters are within acceptable limits, the detector will resume its operation and go out of fault condition.

If any significant parameters have changed, it will remain in a fault condition and a re-initialization will be required.

OPERATION MODES AND TROUBLESHOOTING GUIDE OSI-RIE-XX

Modes	Red and Remote Alarm output	Yellow and Remote Trouble Output	Green	Initiating means	Comments & Troubleshooting Tips
Power on	Off	Blink	Off	Apply Power from discharged state	• All wiring correctly done. • Address switches set.
Alignment	Off	Blink	Off	Lever in 3:00 position and commissioning is active	• Ready to perform alignment. • Follow guidance from the 4 arrows to correctly align.
Initializing/ Commissioning	Off	Blink	Off	Lock lever in 6:00 position to start commissioning	• Commissioning and setting sensitivity. • Do not interrupt beam.
Normal	Off	Off	Blink	Successful completion of initialization or detector reset	• Initializing finished. • Detector operates normal in quiescent condition. • Detector successfully reset.
Alarm	On	Off	Off	Smoke, Test Filter or RTS-151KEY Test Station	• Blinks till reset from FACP.
Trouble-Drift Compensation	Off	3 Quick Blinks	Blink	Long Term Drift Reference Out of 20% Range	• Reduced IR Signal • Clean detector and reflector.
Trouble-Beam Blockage	Off	4 Quick Blinks	Blink	Beam blockage or detector out of alignment	• Remove blockage or re-align detector • Faulty unit.
Trouble-Imager saturation	Off	5 Quick Blinks	Blink	Imager saturated	• Sunlight or very strong light into detector or reflector. • Re-position detector or reflector. • Remove light source.
Test activated-Pass Result	On	Blinks the set sensitivity by number of blinks (1-4). Repeats every 3 seconds till reset.	Off	FACP or RTS151KEY	• Remains in alarm until reset by FACP. • Number of lit arrows indicates sensitivity level that was selected automatically.

DISCLAIMER

Please refer to the insert for the Limitations of Fire Alarm Systems.
For warranty terms, please refer to the Product Guide found at www.systemsensoreurope.com/products/category/beam-smoke-detectors/.

System Sensor® is registered trademarks of Honeywell International Inc.

©2020 System Sensor. 21/10/2020