HIKVISION

DS-2CD2386G2-I(U)

8 MP AcuSense Powered-by-Darkfighter Fixed Turret Network Camera

AcuSense

Powered by DarkFighter

4K WDR H.265+ IR IP67 SD

Empowered by deep learning algorithms, Hikvision AcuSense technology brings human and vehicle targets classification alarms to front- and back-end devices. The system focuses on human and vehicle targets, vastly improving alarm efficiency and effectiveness.

- High quality imaging with 8 MP resolution
- Excellent low-light performance with powered-by-DarkFighter technology
- Efficient H.265+ compression technology
- Clear imaging against strong back light by 120 dB true WDR technology
- Focus on human and vehicle targets classification based on deep learning
- Built-in microphone for real-time audio security(-U)
- Water and dust resistant (IP67)

▪ Specification

Camera	
Image Sensor	1/1.8" Progressive Scan CMOS
Min. Illumination	Color: 0.003 Lux @ (F1.6, AGC ON), B/W: 0 Lux with IR
Shutter Speed	1/3 s to 1/100,000 s
Slow Shutter	Yes
P/N	P/N
Wide Dynamic Range	120 dB
Day & Night	IR cut filter
Angle Adjustment	Pan: 0° to 360°, tilt: 0° to 75°, rotate: 0° to 360°
Lens	
Lens Type	Fixed focal lens, 2.8, 4, and 6 mm optional
Focal Length & FOV	2.8 mm, horizontal FOV 111°, vertical FOV 59°, diagonal FOV 131° 4 mm, horizontal FOV 87°, vertical FOV 47°, diagonal FOV 102° 6 mm, horizontal FOV 51°, vertical FOV 28°, diagonal FOV 60°
Lens Mount	M12
Iris Type	Fixed
Aperture	F1.6
DORI	
DORI	2.8 mm: D: 89.2 m, O: 35.4 m, R: 17.8 m, I: 8.9 m 4 mm: D: 99.4 m, O: 39.4 m, R: 19.9 m, I: 9.9 m 6 mm: D: 140.0 m, O: 55.6 m, R: 28.0 m, I: 14.0 m
Illuminator	
Supplement Light Type	IR
Smart Supplement Light	Yes
IR Wavelength	850 nm
IR Range	Up to 30 m
Video	
Max. Resolution	3840 × 2160
Main Stream	50 Hz: 25 fps (3840 × 2160, 3200 × 1800, 2688 × 1520, 1920 × 1080, 1280 × 720) 60 Hz: 24 fps (3840 × 2160) 30 fps (3200 × 1800, 2688 × 1520, 1920 × 1080, 1280 × 720)
Sub-Stream	50 Hz: 25 fps (640 × 480, 640 × 360) 60 Hz: 30 fps (640 × 480, 640 × 360)
Third Stream	50 Hz: 10 fps (1920 × 1080, 1280 × 720, 640 × 480, 640 × 360) 60 Hz: 10 fps (1920 × 1080, 1280 × 720, 640 × 480, 640 × 360) *Third stream is supported under certain settings.
Video Compression	Main stream: H.265/H.264/H.264+/H.265+ Sub-stream: H.265/H.264/MJPEG Third stream: H.265/H.264 *Third stream is supported under certain settings.
Video Bit Rate	32 Kbps to 16 Mbps
H.264 Type	Baseline Profile/Main Profile/High Profile
H.265 Type	Main Profile

H.264+	Main stream supports
H.265+	Main stream supports
Bit Rate Control	CBR/VBR
Scalable Video Coding (SVC)	H.264 and H.265 encoding
Region of Interest (ROI)	1 fixed region for main stream and sub-stream
Audio	
Audio Type	-U: mono sound
Audio Compression	-U: G.711ulaw/G.711alaw/G.722.1/G.726/MP2L2/PCM/MP3/AAC
Audio Bit Rate	-U: 64 Kbps (G.711ulaw/G.711alaw)/16 Kbps (G.722.1)/16 Kbps (G.726)/32 to 192 Kbps (MP2L2)/8 to 320 Kbps (MP3)/16 to 64 Kbps (AAC)
Audio Sampling Rate	-U: 8 kHz/16 kHz/32 kHz/44.1 kHz/48 kHz
Environment Noise Filtering	-U: Yes
Network	
Protocols	TCP/IP, ICMP, HTTP, HTTPS, FTP, DHCP, DNS, DDNS, RTP, RTSP, NTP, UPnP, SMTP, IGMP, 802.1X, QoS, IPv4, IPv6, UDP, Bonjour, SSL/TLS, PPPoE, SNMP, ARP
Simultaneous Live View	Up to 6 channels
API	Open Network Video Interface (PROFILE S, PROFILE G, PROFILE T), ISAPI, SDK
User/Host	Up to 32 users. 3 user levels: administrator, operator and user
Security	Password protection, complicated password, HTTPS encryption, IP address filter, Security Audit Log, basic and digest authentication for HTTP/HTTPS, TLS 1.1/1.2, WSSE and digest authentication for Open Network Video Interface
Network Storage	MicroSD/SDHC/SDXC card (256 GB) local storage, and NAS (NFS, SMB/CIFS), auto network replenishment (ANR) Together with high-end Hikvision memory card, memory card encryption and health detection are supported.
Client	iVMS-4200, Hik-Connect, Hik-Central
Web Browser	Plug-in required live view: IE 10+ Plug-in free live view: Chrome 57.0+, Firefox 52.0+ Local service: Chrome 57.0+, Firefox 52.0+
Image	
Image Parameters Switch	Yes
Image Settings	Rotate mode, saturation, brightness, contrast, sharpness, gain, white balance adjustable by client software or web browser
Day/Night Switch	Day, Night, Auto, Schedule
SNR	≥ 52 dB
Image Enhancement	BLC, HLC, 3D DNR
Target Cropping	Yes
Interface	
Ethernet Interface	1 RJ45 10 M/100 M self-adaptive Ethernet port
On-Board Storage	Built-in micro SD/SDHC/SDXC slot, up to 256 GB
Built-in Microphone	-U: Yes
Hardware Reset	Yes
Event	
Basic Event	Motion detection (human and vehicle targets classification), video tampering alarm, exception

Smart Event	Scene change detection
Deep Learning Function	
Face Capture	Yes
Perimeter Protection	Line crossing detection, intrusion detection, region entrance detection, region exiting detection Supports human and vehicle targets classification
General	
Linkage Method	Upload to FTP/NAS/memory card, notify surveillance center, send email, trigger recording, trigger capture
Camera Material	Metal
Camera Dimension	Ø138.3 mm × 126.3 mm (Ø5.4" × 5")
Package Dimension	170 mm × 170 mm × 150 mm (6.9" × 6.9" × 5.9")
Camera Weight	Approx. 740 g (1.6 lb.)
With Package Weight	Approx. 1020 g (2.2 lb.)
Storage Conditions	-30 °C to 60 °C (-22 °F to 140 °F). Humidity 95% or less (non-condensing)
Startup and Operating Conditions	-30 °C to 60 °C (-22 °F to 140 °F), humidity 95% or less (non-condensing)
Web Client Language	33 languages English, Russian, Estonian, Bulgarian, Hungarian, Greek, German, Italian, Czech, Slovak, French, Polish, Dutch, Portuguese, Spanish, Romanian, Danish, Swedish, Norwegian, Finnish, Croatian, Slovenian, Serbian, Turkish, Korean, Traditional Chinese, Thai, Vietnamese, Japanese, Latvian, Lithuanian, Portuguese (Brazil), Ukrainian
General Function	Anti-flicker, heartbeat, mirror, privacy mask, flash log, password reset via email, pixel counter
Firmware Version	V5.5.112
Software Reset	Yes
Power Consumption and Current	12 VDC, 0.48 A, max. 5.8 W PoE (802.3af, 36 V to 57 V), 0.19 A to 0.12 A, max. 6.8 W
Power Supply	12 VDC ± 25%, reverse polarity protection PoE: 802.3af, Class 3
Power Interface	Ø5.5 mm coaxial power plug
Approval	
EMC	FCC (47 CFR Part 15, Subpart B); CE-EMC (EN 55032: 2015, EN 61000-3-2: 2014, EN 61000-3-3: 2013, EN 50130-4: 2011 +A1: 2014); RCM (AS/NZS CISPR 32: 2015); KC (KN 32: 2015, KN 35: 2015)
Safety	UL (UL 60950-1); CB (IEC 60950-1:2005 + Am 1:2009 + Am 2:2013); CE-LVD (EN 60950-1:2005 + Am 1:2009 + Am 2:2013)
Environment	CE-RoHS (2011/65/EU); WEEE (2012/19/EU); Reach (Regulation (EC) No 1907/2006)
Protection	IP67 (IEC 60529-2013)

▪ Available Model

DS-2CD2386G2-I (2.8/4/6 mm)

DS-2CD2386G2-IU (2.8/4/6 mm)

▪Dimension

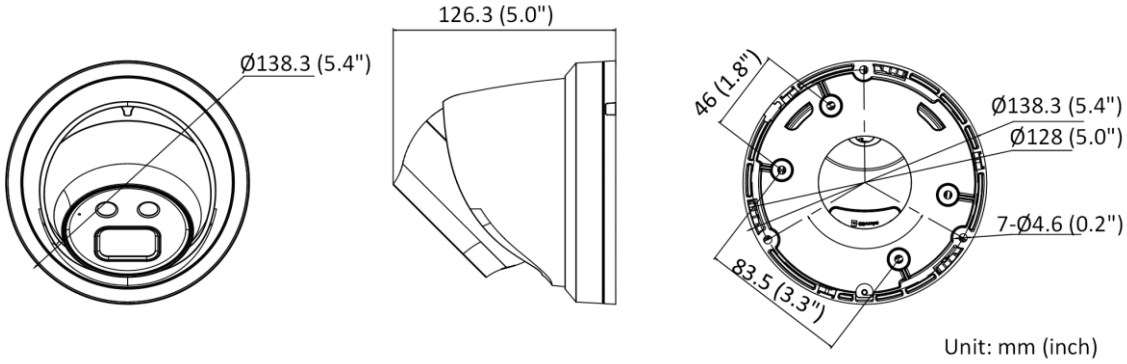

▪ Accessory

▪Optional

DS-1276ZJ-SUS Corner Mount	DS-1275ZJ-SUS Vertical Pole Mount	DS-1271ZJ-140 Pendant Mount
DS-1273ZJ-140B **Wall Mount**	**DS-1273ZJ-140** **Wall Mount**	**DS-1280ZJ-PT6** **Junction Box**

Distributed by

Headquarters
No.555 Qianmo Road, Binjiang District,
Hangzhou 310051, China
T +86-571-8807-5998
overseasbusiness@hikvision.com

Hikvision USA
T +1-909-895-0400
sales.usa@hikvision.com

Hikvision Europe
T +31-23-5542770
sales.eu@hikvision.com

Hikvision UK & Ireland
T +01628-902140
sales.uk@hikvision.com

Hikvision UAE
T +971-4-4432090
salesme@hikvision.com

Hikvision Russia
T +7-495-669-67-99
saleru@hikvision.com

Hikvision Australia
T +61-2-8599-4233
salesau@hikvision.com

Hikvision Italy
T +39-0438-6902
info.it@hikvision.com

Hikvision South Africa
Tel: +27 (10) 0351172
sale.africa@hikvision.com

Hikvision Singapore
T +65-6684-4718
sg@hikvision.com

Hikvision Korea
T +82-(0)31-731-8817
sales.korea@hikvision.com

Hikvision India
T +91-22-28469900
sales@pramahikvision.com

Hikvision Brazil
T +55 11 3318-0050
Latam.support@hikvision.com

Hikvision France
T +33(0)1-85-330-450
info.fr@hikvision.com

Hikvision Spain
T +34-91-737-16-55
info.es@hikvision.com

Hikvision Poland
T +48-22-460-01-50
info.pl@hikvision.com

Hikvision Canada
T +1-866-200-6690
sales.canada@hikvision.com

Hikvision Turkey
T +90 (216)521 7070- 7074
sales.tr@hikvision.com

Hikvision Kazakhstan
T +7-727-9730667
nikia.panfilov@hikvision.ru

Hikvision Tashkent
T +99-87-1238-9438
uzb@hikvision.ru

Hikvision Indonesia
T +62-21-2933759
Sales.Indonesia@hikvision.com

Hikvision Thailand
T +662-275-9949
sales.thailand@hikvision.com

Hikvision Malaysia
T +601-7652-2413
sales.my@hikvision.com

Hikvision Vietnam
T +84-974270888
sales.vt@hikvision.com

Hikvision Hong Kong
T +852-2151-1761
info.hk@hikvision.com

Hikvision Colombia
sales.colombia@hikvision.com

© Hikvision Digital Technology Co., Ltd. 2020 | Data subject to change without notice |

050511220210316